TAURUS®

ASSEMBLY AND OPERATING INSTRUCTIONS

max. 180 kg

~ 30 Min.

193 kg

L 216 | B 85 | H 161

FSUKTFETM.01.05

SKU: TF-ETM

ELITE TREADMILL

Content

1	GENERAL INFORMATION	8
1.1	Technical Data	8
1.2	Personal Safety	10
1.3	Electrical Safety	11
1.4	Set-Up Place	12
2	ASSEMBLY	13
2.1	General Instructions	13
2.2	Scope of Delivery	14
2.3	Assembly	16
3	OPERATING INSTRUCTIONS	24
3.1	Console Overview	25
3.2	Display	26
3.3	Speed Dial Buttons	27
3.4	Programmes	28
3.5	Quick start	28
3.6	Manual programme	29
3.7	Programme mode	30
3.7.1	Programme Overview	32
3.8	Custom programme	33
3.9	Target heart rate programme	34
4	WORKOUT TIPS	36
4.1	General Instructions	36
4.1.1	Training clothes	36
4.1.2	Warming up and stretching	36
4.1.3	Medication	37
4.1.4	Used muscle groups	37
4.1.5	Exercise frequency	37
4.2	Workout journal	39
4.3	Wireless Connection and Fitness Apps	40
5	STORAGE AND TRANSPORT	41
5.1	General Instructions	41
5.2	Transportation Wheels	41
6	TROUBLESHOOTING, CARE AND MAINTENANCE	42
6.1	General Instructions	42

6.2 Faults and Fault Diagnosis 42
6.3 Error Codes and Troubleshooting 43
6.4 Care and Maintenance 44
6.4.1 Adjusting the Running Mat 44
6.4.2 Re-tensioning the Running Mat 45
6.4.3 Lubricating the Running Mat 45
6.5 Maintenance and Inspection Calendar 46

7 DISPOSAL 46

8 RECOMMENDED ACCESSORIES 47

9 ORDERING SPARE PARTS 48

9.1 Serial Number and Model Name 48
9.2 Parts List 49
9.3 Exploded Drawing 53

10 WARRANTY 55

11 CONTACT 57

Dear customer,
Thank you for choosing quality training equipment from the TAURUS brand. Taurus offers sports and fitness equipment for home users with high demands on quality, functionality and longevity. Also, Taurus is a well-known and experienced brand for equipping professional rooms for fitness studios and business customers. The focus of Taurus fitness equipment is on what matters most in sports: maximum performance! Therefore, the devices are developed in close consultation with athletes and sports scientists. Because athletes know best what makes perfect fitness equipment.

Further information can be found at www.fitshop.co.uk

Intended Use

The equipment may only be used for its intended purpose.

This fitness equipment is suitable for home use, semi-professional use and commercial or professional use. The semi-professional sector includes, for example, institutional facilities such as hospitals, schools, hotels and associations. Professional use refers to commercial use, e.g. in a fitness studio.

Legal Notice

Fitshop GmbH
Europe's No. 1 for home fitness

International Headquarters
Flensburger Straße 55
24837 Schleswig
Germany

Management:
Christian Grau
Sebastian Campmann
Dr. Bernhard Schenkel

No. HRB 1000 SL
Local Court Flensburg
European VAT Number: DE813211547

Disclaimer

© TAURUS is a registered brand of the company Fitshop GmbH. All rights reserved. Any use of this trademark without the explicit written permission of Fitshop is prohibited.

Product and manual are subject to change. Technical data can be changed without advance notice.

FITSHOP

Europe's No.1 for Home Fitness

ABOUT THIS MANUAL

Please carefully read the entire manual before installation and first use. The manual will help you to quickly set up the system and explains how to safely use it. Make sure that all persons exercising with the equipment (especially children and persons with physical, sensory, mental or motor disabilities) are informed about this manual and its contents in advance. In case of doubt, responsible persons must supervise the use of the equipment.

Due to ongoing changes and software optimisations, the manual may have to be updated. If you notice any discrepancies during assembly or use, please refer to the manual uploaded to the webshop. The latest manual is always available there.

This equipment has been manufactured according to the latest safety knowledge. As far as possible, potential safety hazards which could cause injury have been eliminated. Make sure to carefully follow the instructions and that all parts are securely in place. If required, read through the instructions again to correct any mistakes.

Training devices must be classified according to accuracy and use. Accuracy classes are only applicable to devices that display training data.

Accuracy classes

Class A: high accuracy.
Class B: medium accuracy.
Class C: low accuracy.

The use classes explain the intended use of the training device.

Use classes

Class S (studio): professional and/or commercial use.
These training devices are intended for the use in training rooms of facilities such as sports clubs, school facilities, hotels, clubs and studios whose access and supervision is specifically regulated by the owner (person with legal responsibility).

Class H (home use): use at home.
These stationary training devices are intended for the use in private homes where access to the training device is regulated by the owner (person with legal responsibility).

Please pay close attention to the safety and maintenance instructions given here. The contract partner cannot be held liable for damage to health, accidents or damage to the equipment when it is not used in accordance with these instructions.

The following safety instructions may appear in this manual:

► **ATTENTION**
This notice indicates potentially hazardous situations which, if not avoided, may result in property damage.

⚠ **CAUTION**
This notice indicates potentially hazardous situations which, if not avoided, may result in slight or minor injuries!

⚠ **WARNING**
This notice indicates potentially hazardous situations which, if not avoided, may result in death or serious injuries!

⚠ **DANGER**
This notice indicates potentially hazardous situations which, if not avoided, will result in death or serious injuries!

ⓘ **NOTICE**
This notice indicates further useful information.

Retain these instructions in a safe place for future reference, maintenance or when ordering replacement parts.

1.1 Technical Data

Weight and dimensions	
Item weight (gross, including packaging)	212.5 kg
Item weight (net, without packaging)	193 kg
Packaging dimensions of cartons (L x W x H)	230.5 cm × 98.5 cm × 57 cm
Dimensions (L x W x H)	216 cm × 85 cm × 161 cm
Running mat	
Thickness of the running mat	2.5 mm
Running mat size in cm (L x W)	155 cm × 58 cm
Maximum load	
Maximum user weight	180 kg
Technical specifications	
Motor Type	AC motor
Power supply	Mains connection
Power	4 HP
Console data	
Display	Time
	Speed
	Distance/Track
	Calories
	Incline
	Heart rate
	Pace
Display type	LED
Engine data	
Minimum speed	0.5 km/h
Maximum speed	25 km/h
Incline	0 - 15 %
Incline interval	1 %

Programme overview	
Quickstart	1
Manual programmes	3
User programmes	1
Preset programmes	20
Heart rate programmes	4
Other data	
Use class	S

1.2 Personal Safety

⚠ **DANGER**

+ Before you start using the equipment, you should consult your physician that this type of exercise is suitable for you from a health perspective. Particularly affected are persons who: have a hereditary disposition to high blood pressure or heart disease, are over the age of 45, smoke, have high cholesterol values, are overweight and/or have not exercised regularly in the past year. If you are under medical treatment that affects your heart rate, medical advice is absolutely essential.
+ Note that excessive training can seriously endanger your health. Please also note that heart rate monitoring systems can be inaccurate. If you notice any signs of weakness, nausea, dizziness, pain, shortness of breath, or other abnormal symptoms, stop exercising immediately and seek advice from your doctor if necessary.
+ The owner must communicate all warnings and instructions to the user.

⚠ **WARNING**

+ This equipment may not be used by children under the age of 14.
+ Children should not be allowed unsupervised access to the equipment.
+ Persons with disabilities must have a medical license and must be under strict observation when using the equipment.
+ The equipment is strictly for use by one person at a time.
+ If your equipment provides a safety key, the clip of the safety key must be attached to your clothing before starting your training. In the event of a fall, the EMERGENCY STOP of the equipment can be initiated.
+ If an emergency occurs and training has to be stopped abruptly, pull out the safety key, grab both handles, jump onto the side rails and wait until the treadmill has come to a complete stop.
+ Keep your hands, feet and other body parts, hair, clothing, jewellery and other objects well clear of moving parts.
+ During use, wear suitable sports clothing rather than loose or baggy clothing. When wearing sports shoes, make sure they have suitable soles, preferably made of rubber or other non-slip materials. Shoes with heels, leather soles, studs or spikes are unsuitable. Never exercise barefoot.

⚠ **CAUTION**

+ If your equipment needs to be connected to the power supply with a mains cable, make sure that the cable is not a potential tripping hazard.
+ Make sure that nobody is within the range of motion of the equipment during training so as not to endanger you or other persons.
+ Be aware that if adjustment devices are left protruding, they may impede the user's movement.
+ The safety level of the appliance can only be maintained if it is regularly checked for damage and wear.

ATTENTION

+ Do not insert any objects of any kind into the openings of the device.
+ To protect the equipment from use by unauthorised third parties, always remove the power cable (if existing) when not in use and store it in a safe place that is inaccessible to unauthorised persons (e.g. children).

1.3 Electrical Safety

DANGER

+ In order to reduce the risk of an electric shock, always unplug the equipment from the mains socket immediately after your workout, before assembly or dismantling, and before maintenance or cleaning. Do not pull on the cable.

WARNING

+ Do not leave the equipment unattended while the mains cable is plugged into the mains socket. During your absence, the mains cable must be removed from the mains socket to prevent improper use by third parties or children.
+ If the mains cable or plug is damaged or defective, contact your contract partner. Until repair, the equipment must not be used.

ATTENTION

+ The equipment requires a mains connection of 220-230 V with 50 Hz mains voltage.
+ The equipment may only be connected directly to an earthed socket using the supplied mains cable. Extension cables must conform to VDE guidelines. Always completely unwind the mains cable.
+ The socket must be protected by a fuse with a minimum fuse rating of "16 A, slow blow".
+ Do not make any changes to the mains cable or the mains plug.
+ Keep the mains cable away from water, heat, oil and sharp edges. Do not route the mains cable underneath the equipment or under a carpet or rug, and do not place any objects on top of it.
+ If your purchased item is equipped with a TFT console, software updates must be carried out regularly. Follow the instructions on the console to perform the update(s).
+ The software systems on gym equipment with TFT consoles are set up only for the pre-installed apps. Do not install any additional apps.

NOTICE

+ The pre-installed apps on TFT consoles are produced and provided by external manufacturers. Fitshop does not take any responsibility for the availability, functionality or contents of these apps.

1.4 Set-Up Place

⚠ **WARNING**

+ Do not place the equipment in main corridors or escape routes.

⚠ **CAUTION**

+ Make sure that there is a safety area behind the treadmill with a length of at least 2 m and a width at least equal to the width of the treadmill.
+ The training room should be well ventilated during training and not be exposed to any draughts.
+ Choose the place in which to set up the equipment such that there is enough free space/ clearance to the front, the rear and to the sides of the equipment.
+ The free area in the direction from which the exercise equipment is accessed must be at least 0.6 m larger than the exercise area.
+ The set-up and mounting surface of the equipment should be flat, loadable and solid.

► **ATTENTION**

+ The device may only be used in one building, in sufficiently tempered and dry rooms (ambient temperatures between 10°C and 35°C). The equipment should not be used outdoors or in rooms with high humidity (over 70%) like swimming pools.
+ A floor protective mat/equipment underlay can help to protect high-quality floor coverings (parquet, laminate, cork, carpets) from dents and sweat and can help to level out slight unevenness.
+ For Class S equipment, the exercise equipment may only be used in areas where access, supervision and control are specifically regulated by the owner.

Recommended free zone:

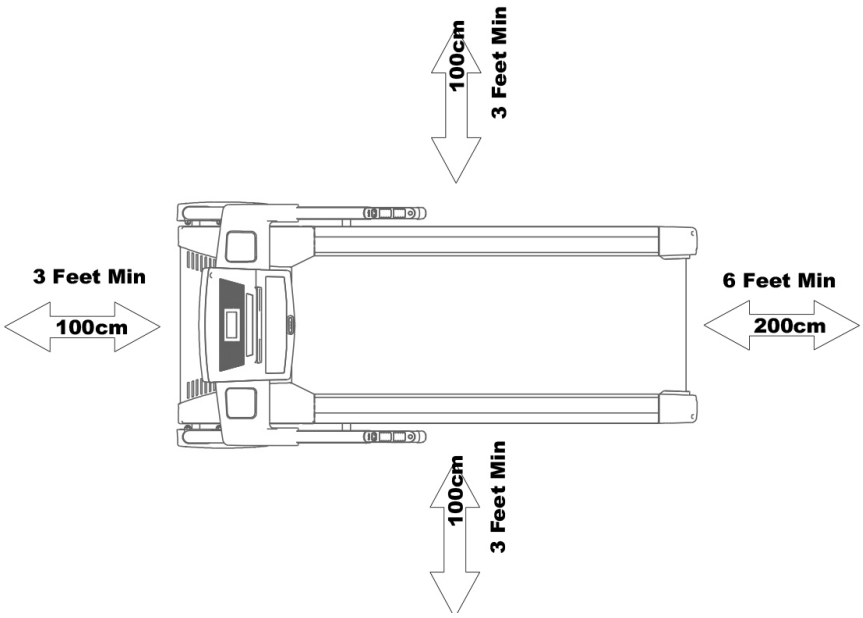

2.1 General Instructions

⚠ **DANGER**

+ Do not leave any tools, packaging materials such as foils or small parts lying around, as otherwise there is a danger of suffocation for children. Keep children away from the equipment during assembly.

⚠ **WARNING**

+ Pay attention to the instructions attached to the equipment in order to reduce the risk of injuries.

⚠ **CAUTION**

+ Ensure to have sufficient room for movement in each direction during assembly.
+ The assembly of the equipment must be carried out by at least two adults. If in doubt, seek the help of a third technically skilled person.

► **ATTENTION**

+ To prevent damage to the equipment and the floor, assemble the equipment on a mat or packaging board.

ⓘ **NOTICE**

+ In order to make the assembly as simple as possible, some screws and nuts to be used can already be pre-assembled.
+ Ideally, assemble the equipment at its later set-up place.

2.2 Scope of Delivery

⚠ **WARNING**
There is a transportation lock that prevents the treadmill from opening during transport. This transportation lock must be removed before assembly.

The scope of delivery consist of the following parts. At the beginning, check whether all parts and tools belonging to the device are included in the scope of delivery and whether damage has occurred. In the event of complaints, the contractual partner must be contacted directly.

⚠ **CAUTION**
If parts of the scope of delivery are missing or damaged, the assembly must not be carried out.

ⓘ **NOTICE**
Required tools (included in the delivery): Allen Key (6mm)

1: Frame

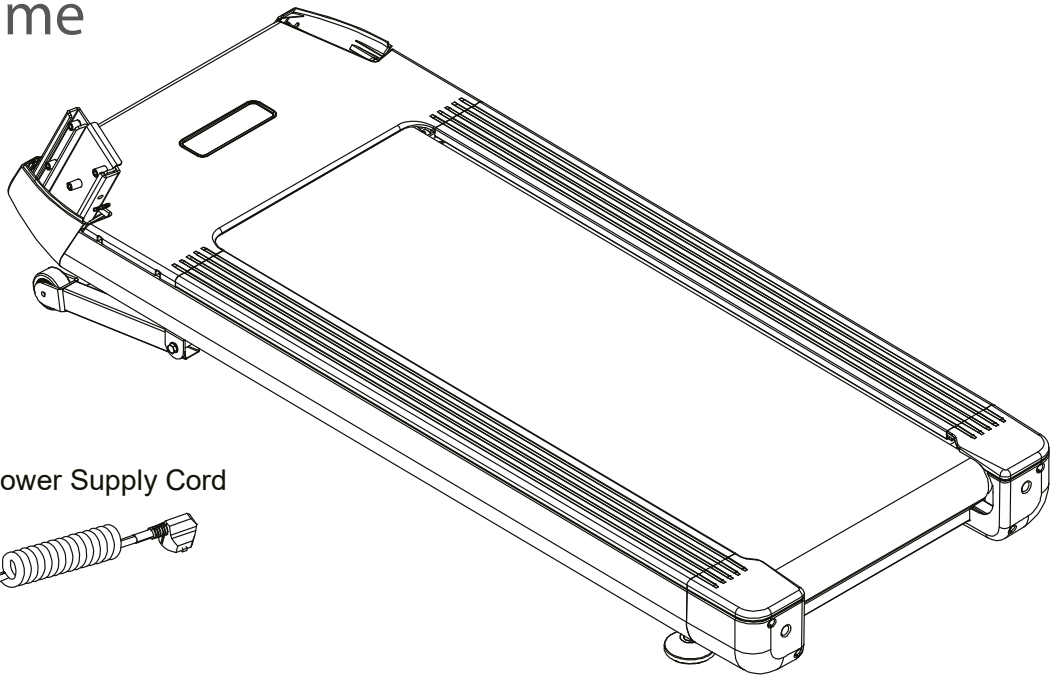

129: Power Supply Cord

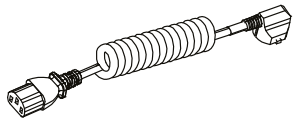

100-1: Console

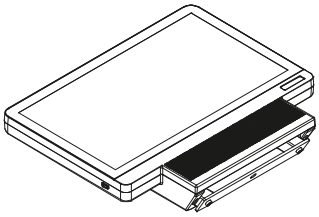

80: Console-Handle Assembly

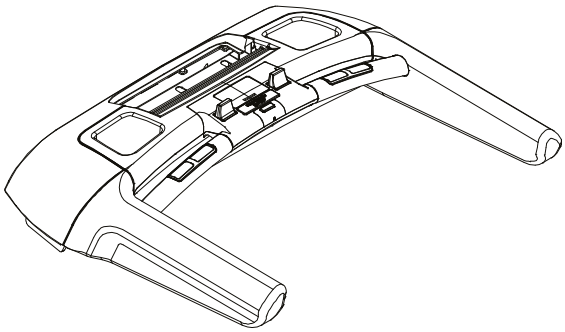

66: Side Supporting Tube (R)

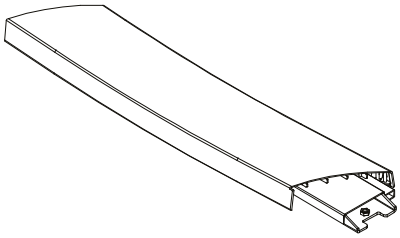

68: Side Supporting Tube Inner Cover (R)

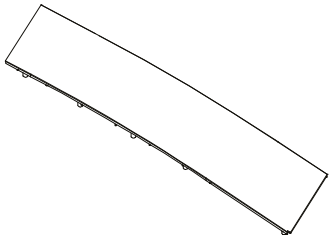

61: Side Supporting Tube (L)

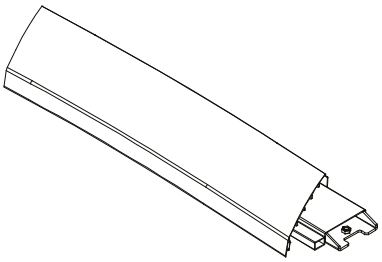

63: Side Supporting Tube Inner Cover (L)

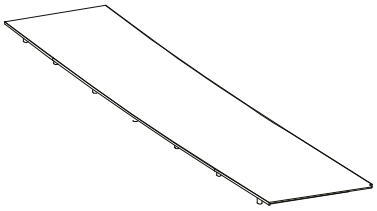

A

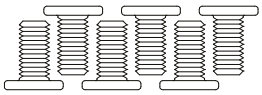

(16) Screw M10x20Lx 6PCS

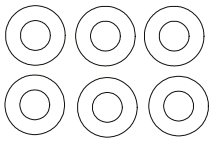

(22) Flat washer ∅10x ∅20x2T x6PCS

B

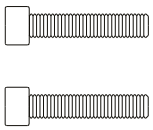

(11) Allen Bolt M8x 40L x2PCS

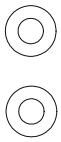

(21) Flat washer ∅8.5x ∅17x 2Tx 2PCS

C

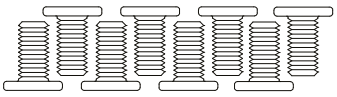

(16) Screw M10x 20Lx 8PCS

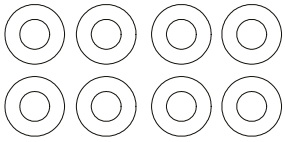

(22) Flat washer ∅10x ∅20x 2Tx 8PCS

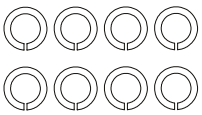

(20) Spring washer ∅10x 2.5Tx 8PCS

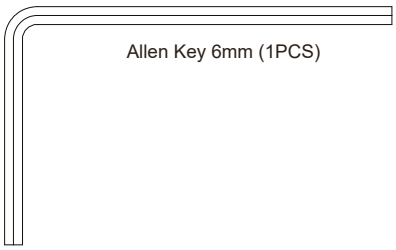

Allen Key 6mm (1PCS)

2.3 Assembly

Before assembly, take a close look at the individual assembly steps shown and carry out the assembly in the order given.

ⓘ **NOTICE**

+ First loosely screw all parts together and check that they fit properly. Tighten the screws using the tool only when you are instructed to do so.
+ Do not tighten the screws and bolts with excessive force as they could be damaged.
+ If you have difficulty recognising the graphics, we recommend that you open and/or download the PDF instructions stored in the webshop on your end device (e.g. smartphone, tablet or PC). There you have the option of zooming in closer. Please note that the Adobe Acrobat Reader programme must be installed on your end device in order to open the file.

Step 1: Take out the treadmill

1. Take the treadmill out of the packaging.

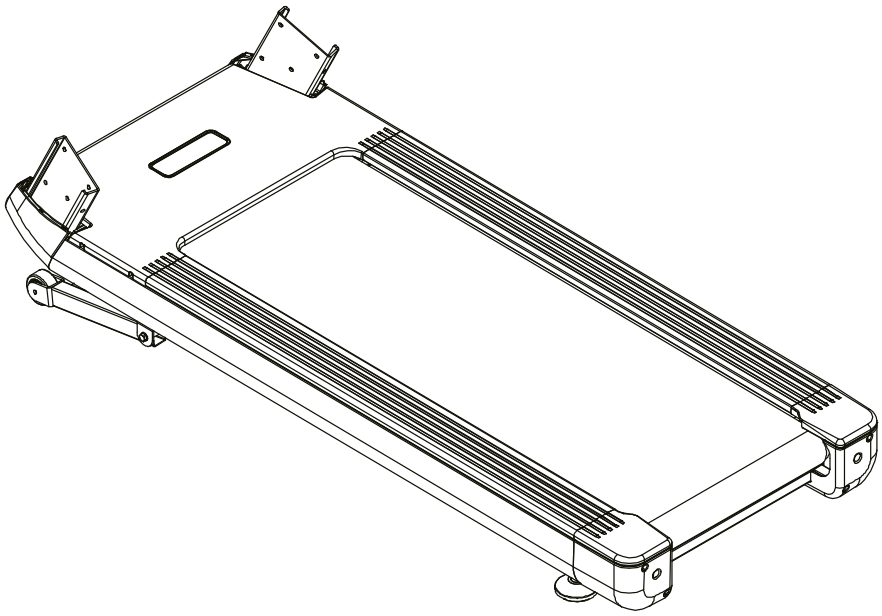

Step 2: Attaching the left console arm

1. Attach the left console arm (61) to the main frame (1) using four screws (16), four spring washers (20), and four flat washers (22).

Use the Allen key (6 mm) for this.

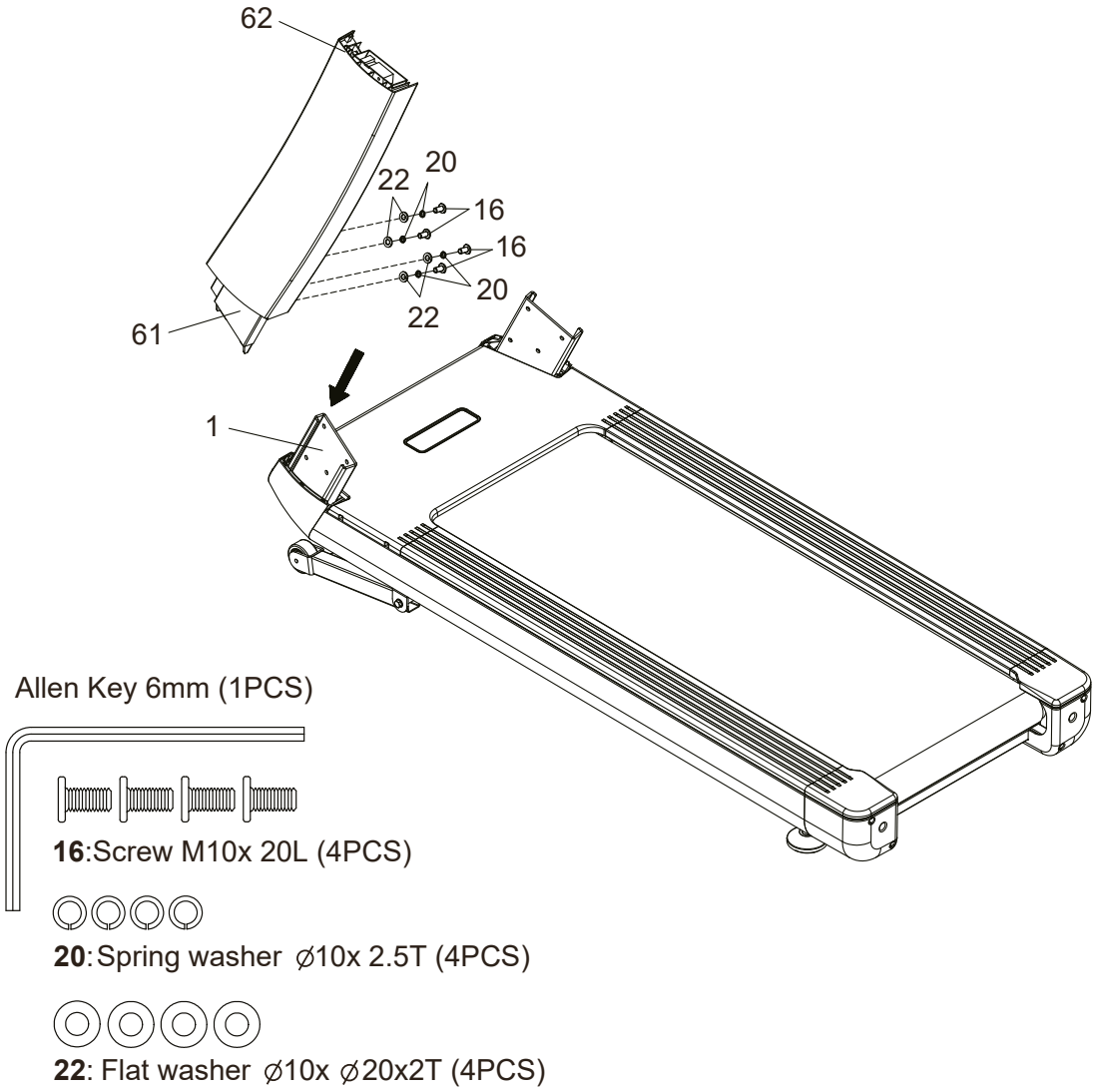

Step 3: Attaching the right console arm

► **CAUTION**

+ Make sure not to pinch the cables.
+ Ensure that the plug connections are secure.

1. Connect the cable (69) to the cable of the main frame (69).
2. Attach the right console arm (66) to the main frame (1) using four screws (16), four spring washers (20), and four flat washers (22).

Use the Allen key (6 mm) for this.

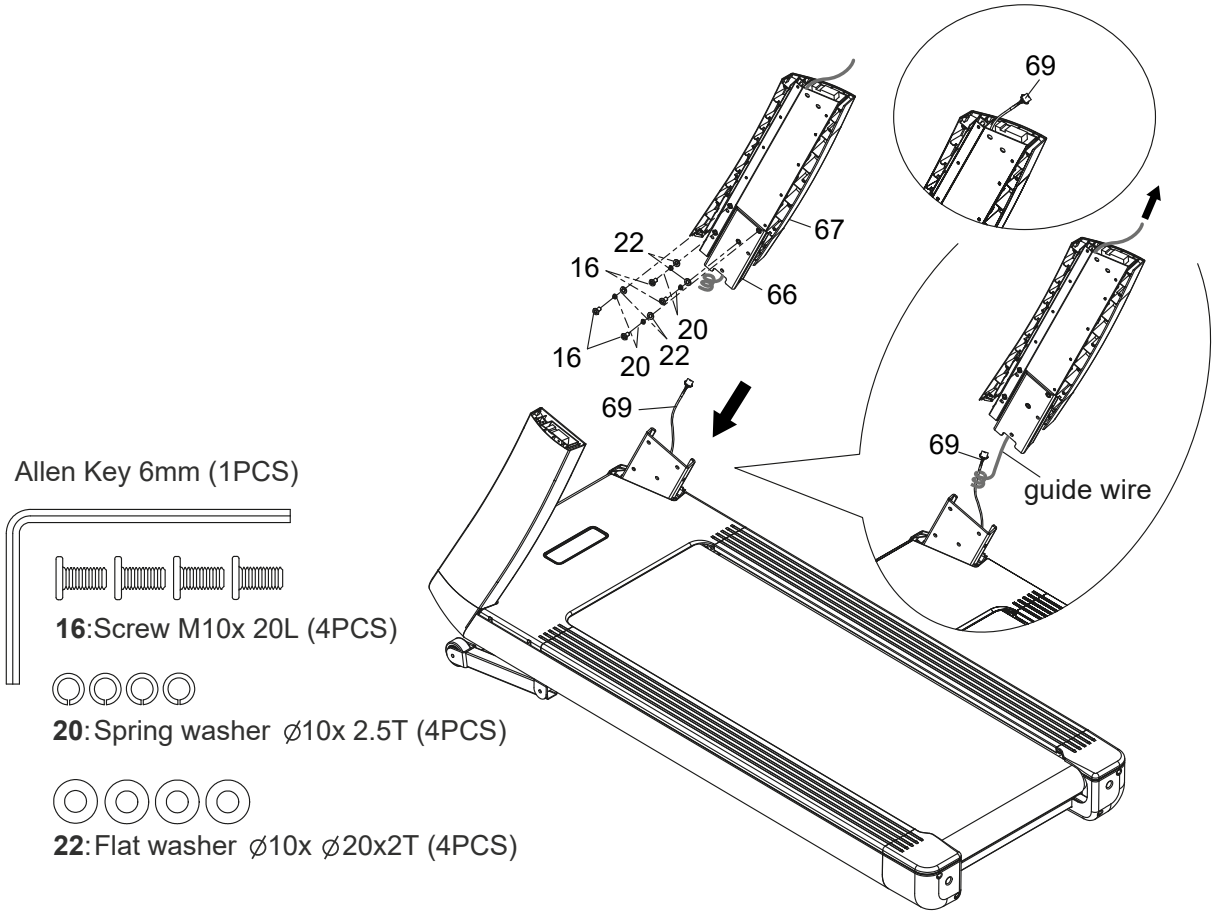

Step 4: Assembling the console bracket

► **CAUTION**

+ Make sure not to pinch the cables.
+ Ensure that the plug connections are secure.

1. Connect the console cable (120) to the console arm cable (69).
2. Attach the console supporting frame (80) to the left and right console arms (61, 66) using three screws (16) and three flat washers (22) each.

Use the Allen key (6 mm) for this.

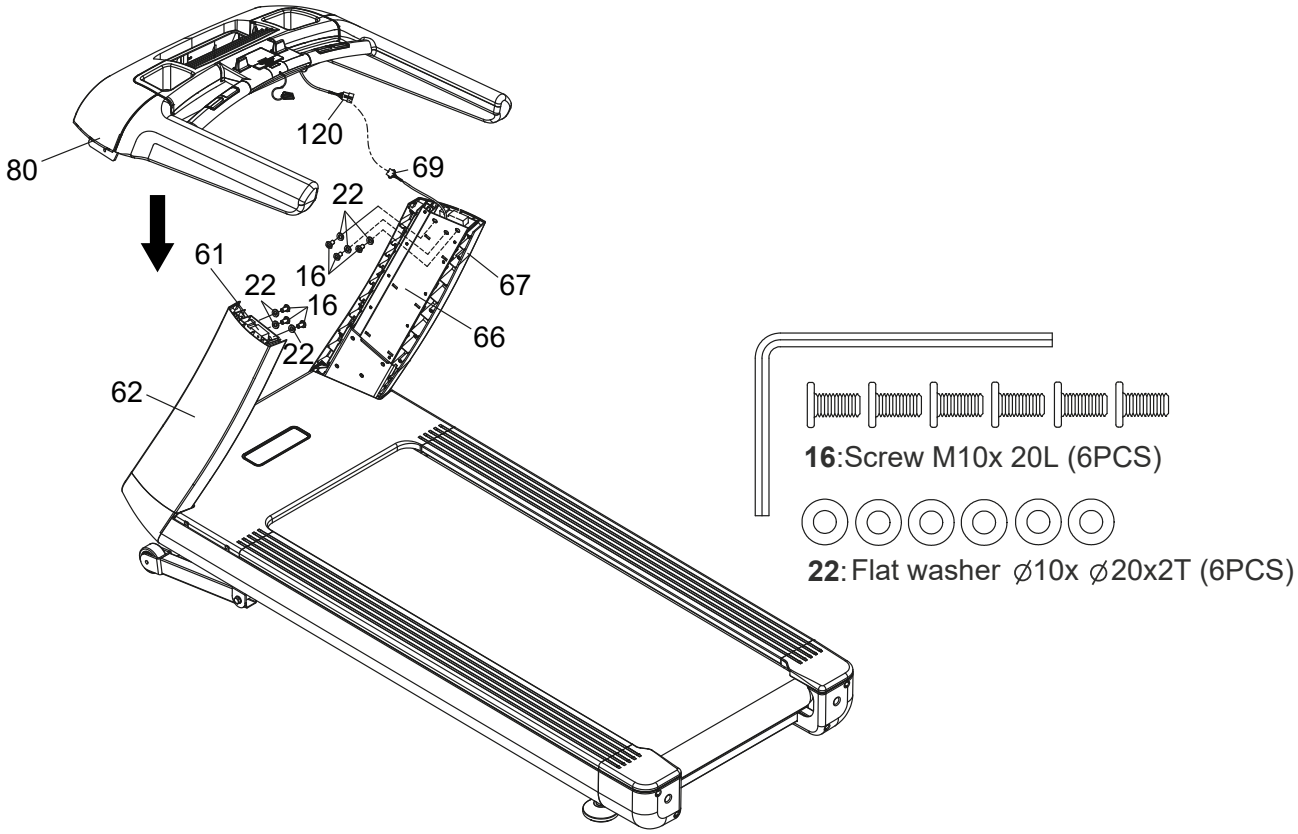

Step 5: Attaching the covers

1. Attach the console arm covers (63, 68) to the left and right console arms (61, 66).

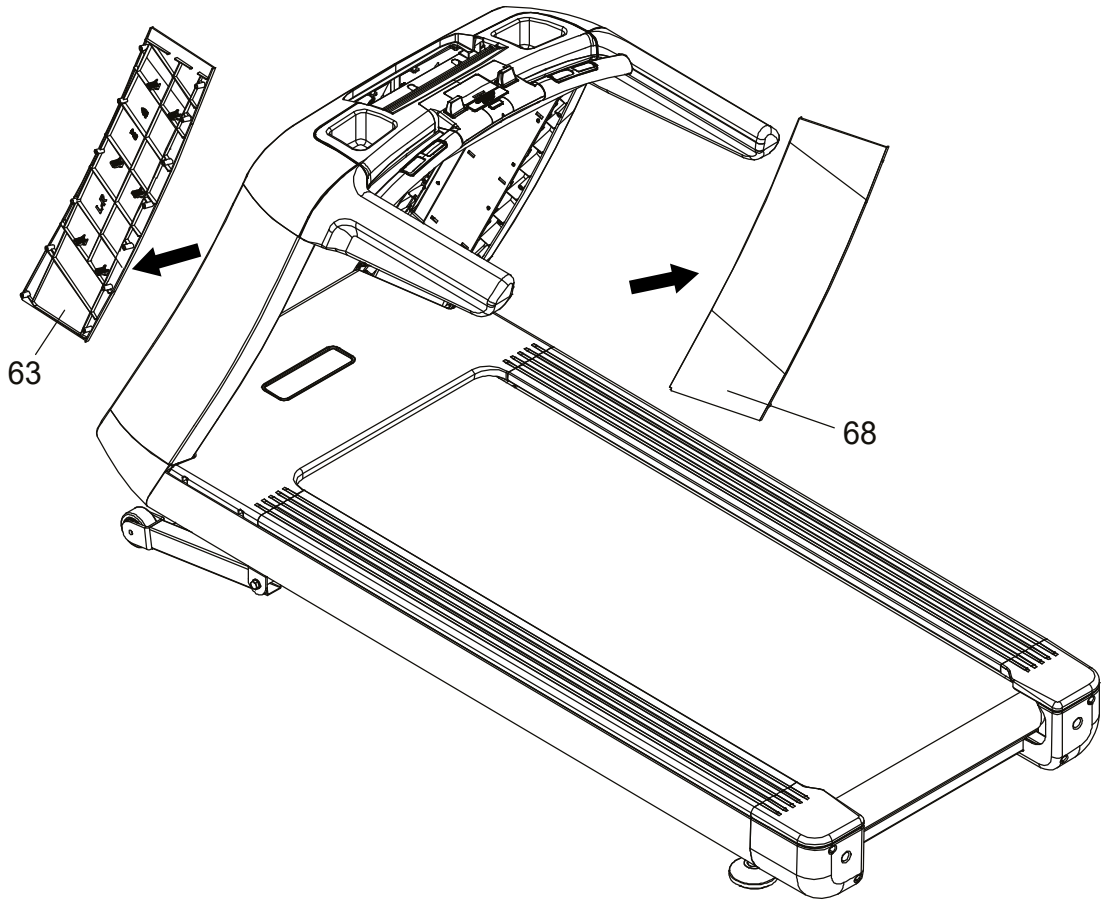

Step 6: Installing the console

► **CAUTION**

+ Make sure not to pinch the cables.
+ Ensure that the plug connections are secure.

1. Connect the console cables to the console bracket cables according to the following scheme:

+ 106 - 86
+ 104 - 125
+ 103 - 120
+ 106 - 86

2. Attach the console (100-1) to the console supporting frame (80) using two bolts (11) and two flat washers (21).

Use the Allen key (6 mm) for this.

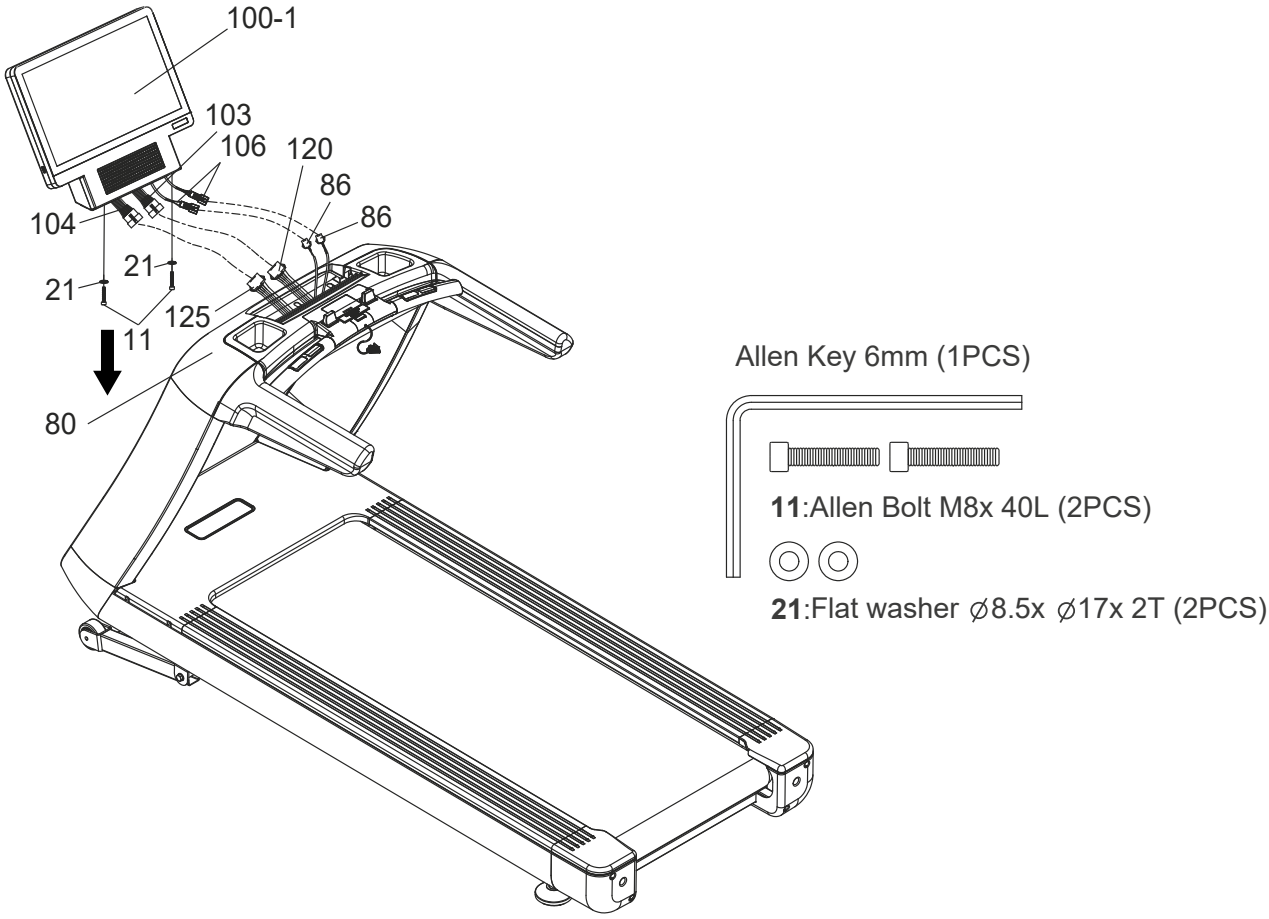

Step 7: Connecting the power cable

► **CAUTION**
Do not connect the device to a power strip, as this may prevent the device from receiving sufficient power and can cause technical malfunctions.

1. Connect the power cable (129) to the treadmill.

Plug the power cable into an outlet that complies with the specifications in the electrical safety chapter.

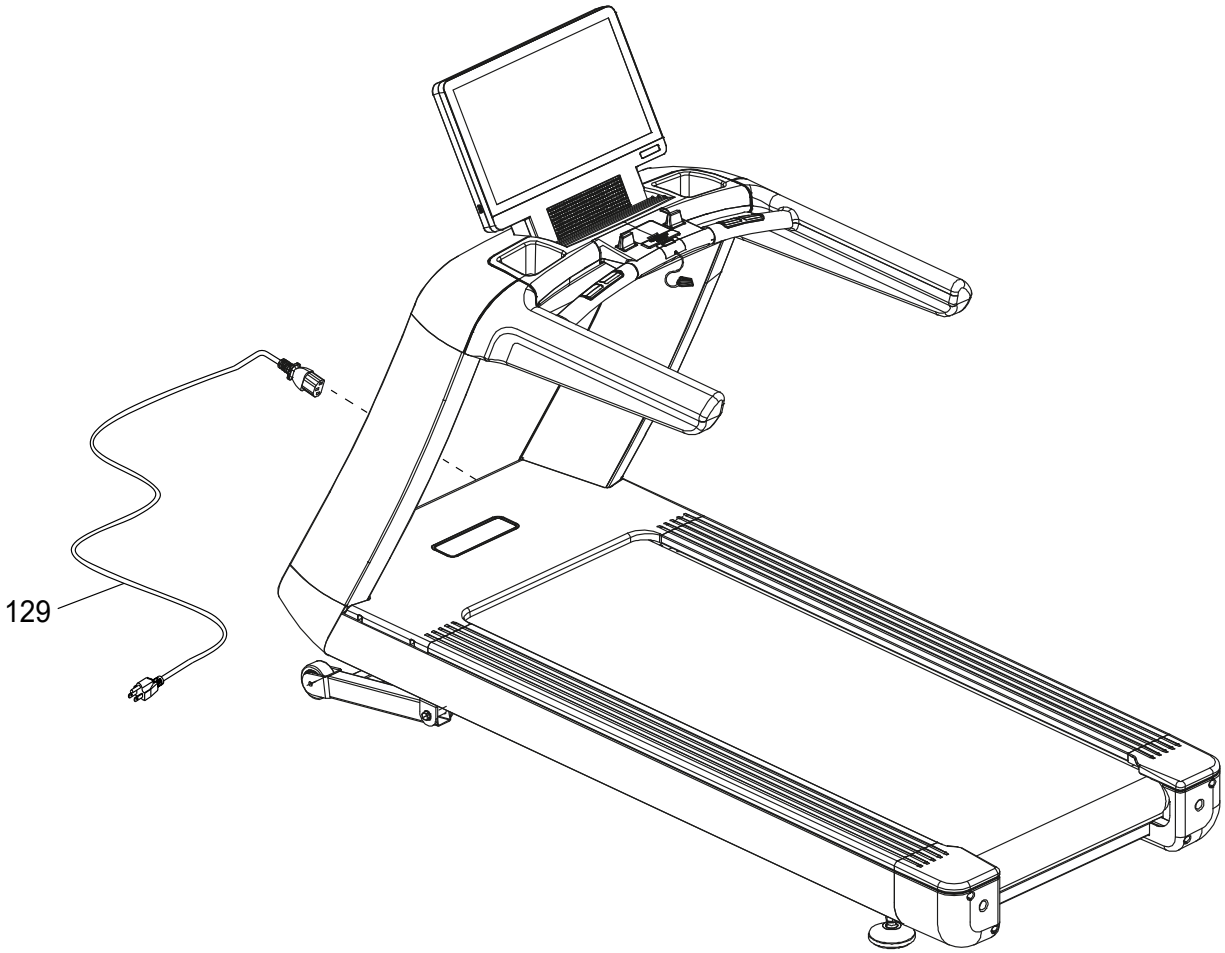

Step 8: Alignment of the feet

If the floor is uneven, you can stabilize the treadmill by turning the two setting screws under the main frame.

1. Lift the treadmill on the desired side and rotate the setting screws under the main frame.
2. Rotate the screws clockwise in order to remove them and to raise the running surface.
3. Rotate them counterclockwise in order to lower the running surface.

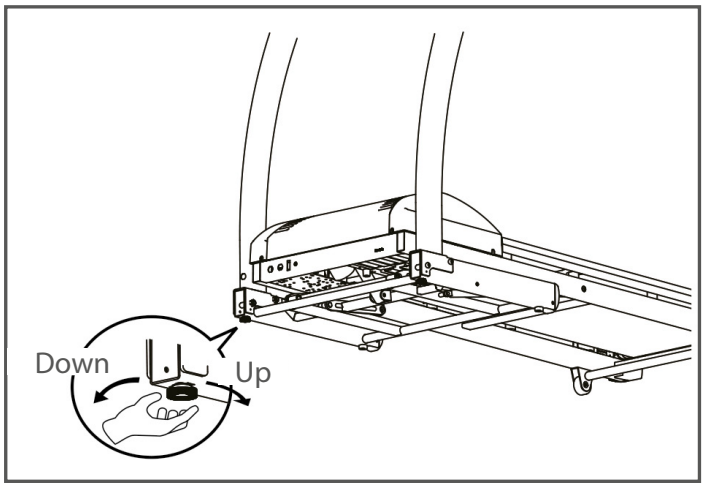

Correctly Getting On and Off

1. To step onto the treadmill, grip the handrails with both hands and step onto the treadmill one foot at a time.
2. To get off, grip the handrails with both hands and step off the treadmill one foot at a time.

NOTICE

+ Familiarise yourself with all the functions and setting options of the device before starting training. Have the proper use of this product explained to you by a specialist.
+ Always start your training with low intensity and increase evenly and gently. End your training with a cool-down phase. If you are unsure, please consult your physician.
+ Most new treadmills make a knocking noise caused by the running mat sliding over the rollers. The time it takes for the noise to subside depends on the intensity of use, the temperature and the humidity around the treadmill.
+ Please bear in mind that the noise emission under load is higher than without load.

SAFETY KEY

WARNING

+ For your safety, the device is equipped with an EMERGENCY STOP function. The equipment can only be operated if the safety key is correctly attached to the contact point of the cockpit. If the safety key is no longer on the contact point, the equipment automatically stops. Therefore, the Safety Key cord with the clip must be attached to your clothing before every training session. If you want to quickly stop the treadmill, if you can no longer control the speed, or if another emergency occurs, remove the safety key from the cockpit using the cord.
+ To enable the safety key to detach from the contact point of the cockpit in the event of a fall, the safety key clip must be firmly attached to your clothing!
+ Make sure that the safety key is not accessible to children.

3.1 Console Overview

Button	Name	Function
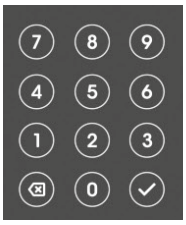	Keypad	Set values for the training. + Confirm settings by pressing the hook. + Delete Seetings by pressing backspace.
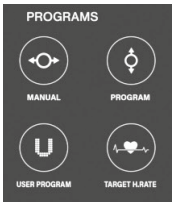	Programme buttons + Manual programmes + Preset programmes + User-defined programmes + Heart rate controlled programmes	To select between programmes, press one of the buttons.
	Enter	Press this button to confirm data and programmes.
	Arrow keys	To increase or decrease values, press this button.

▶ START II PAUSE	Start	+ To start the device in standby mode, press this button. + To start training programmes, press this button.
	Pause	+ Pause the training. + To resume the training, press the button again. + The speed starts at 0.5 km/h.
■ STOP	Stop	+ To end training, press this button.
R	Velocity Button	To increase or decrease the speed, press this button.
L	Incline Button	To increase or decrease the incline, press this button.

3.2 Display

ⓘ **NOTE**

+ If two values are displayed in the 'Display' column, the display for this area alternates.
+ The heart rate is only displayed when the hand pulse sensors are touched or when using a chest strap (not included).

Display	Function
+ INCLINE + CALORIES	+ Displays the incline level. (Display range 0 - 15) + Displays calories (0 - 999)
+ TIME + PACE	+ Displays the training time (0:00 - 99:59) + Displays the time required per kilometre. (0:00 - 99:59)
SPEED	Displays the speed (0.5 - 25 km/h)
+ DISTANCE + HEARTRATE	+ Displays the training distance (0.0 - 99 km) + Displays the heart rate (30-230)
LED MATRIX	+ Displays the training data. + Running route is displayed graphically.

3.3 Speed Dial Buttons

Button	Name	Function
EMERGENCY STOP	EMERGENCY BUTTON	To quickly stop the treadmill, press this button.
16 / 12 / 10 / 8 / 6 / 4	Velocity (Speed Dial Button)	+ To quickly adjust the speed, press one of the buttons. + The number displayed corresponds to the speed in kilometres per hour.
+ / − SPEED km/h	Velocity: +/-	+ To adjust the speed during training, press the buttons. + Adjustment interval: 0.1 km/h
15 / 12 / 9 / 6 / 3 / 0	Incline (Speed Dial Button)	To quickly adjust the incline, press one of the buttons.
^ / v INCLINE %	Incline: ^/v	+ To adjust the incline during training, press the buttons. + Adjustment interval: 1%

3.4 Programmes

To make your training even more efficient, you can choose from several training programmes.

You can choose from the following programmes:

+	Quickstart:	1
+	Manual programmes:	3
+	User programmes.	1
+	Preset programmes:	20
+	Heart rate programmes:	4

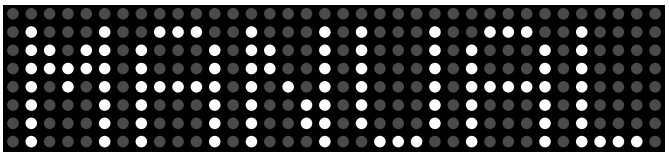

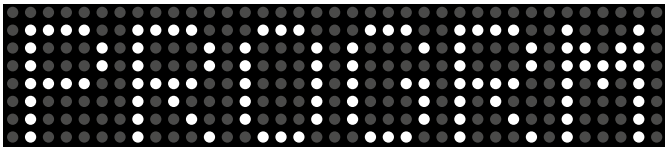

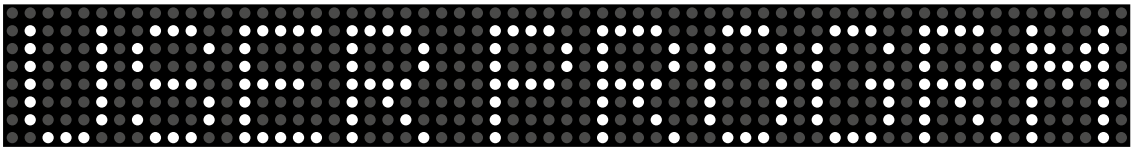

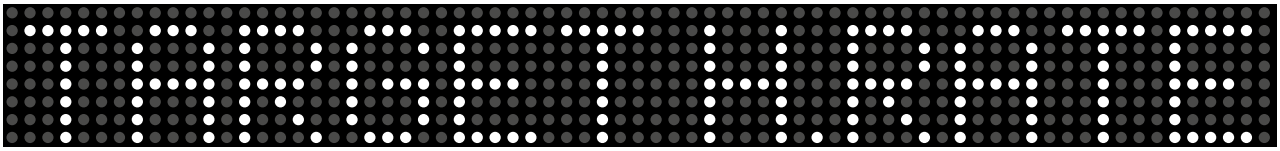

3.5 Quick start

You can start a workout without any further presets.

ⓘ **NOTE**
You can adjust the incline and speed during your workout using the quick selection buttons.

To start the quick start programme:

1. Press START/PAUSE.

The treadmill will start at a speed of 0.5 km/h.

2. To pause the training, press START/PAUSE.
3. To resume the training, press START/PAUSE.
4. To end the training, press STOP.

3.6 Manual programme

You can start a workout with your own presets.

ⓘ **NOTE**

+ If you set a target for time, distance or calories, the workout will end automatically as soon as one of the targets is reached.
+ If you only want to train for one target, enter only the corresponding value.
+ You can adjust the speed and incline at any time during the workout.

To start the manual programme:

1. Select MANUAL mode (Figure 1).
2. Confirm with ENTER.
3. **Optional**: Set the time, distance and calories using the arrow keys or the keypad.

3.1. Confirm each value with ENTER (Figures 2–4).

4. If you do not set any target values, press START/PAUSE to begin the workout.

The values will be counted up.

5. To pause the workout, press STOP.

You will return to the programme presets.

6. Press START/PAUSE to start the training with the adjusted preset values.
7. To pause the training, press START/PAUSE.
8. To resume the training, press START/PAUSE.
9. To end the training, press STOP.

FIGURE 1

FIGURE 2

FIGURE 3

FIGURE 4

3.7 Programme mode

You can start a workout with a preset programme.

ⓘ **NOTE**

+ If you set a target for time, distance or calories, the workout will end automatically as soon as one of the targets is reached.
+ If you only want to train for one goal, enter only the corresponding value.
+ During programme mode, the speed and incline displays alternate to show the current values (Figures 10–12).

To start programme mode:

1. Select PROGRAM mode (Figure 5).
2. Confirm with ENTER.
3. Select one of the programmes P01–P20 using the arrow keys (^/v) (Figure 6).
4. Confirm with ENTER.
5. **Optional**: Set the time, distance and calories using the arrow keys or the keypad (Figures 7–9).

5.1. Confirm each value with ENTER.

6. If you do not set any target values, press START/PAUSE to begin the workout.

The values will be counted up.

7. To pause the workout, press START/PAUSE.

You will return to the programme settings.

8. Press START/PAUSE to begin the workout with the changed default settings.
9. To pause the training, press START/PAUSE.
10. To resume the training, press START/PAUSE.
11. To end the training, press STOP.

FIGURE 5

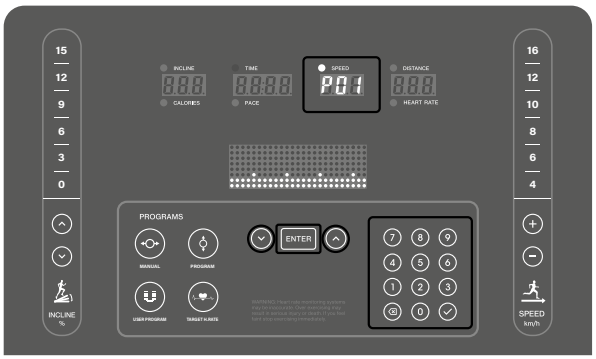

FIGURE 6

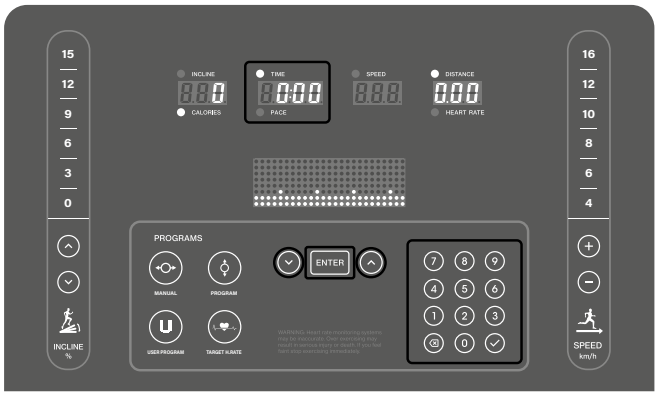

FIGURE 7

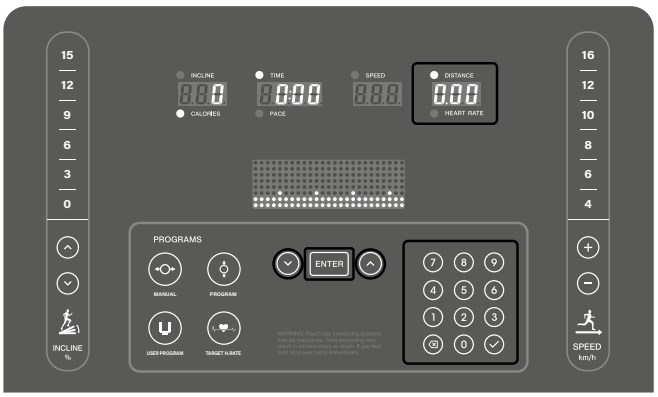

FIGURE 8

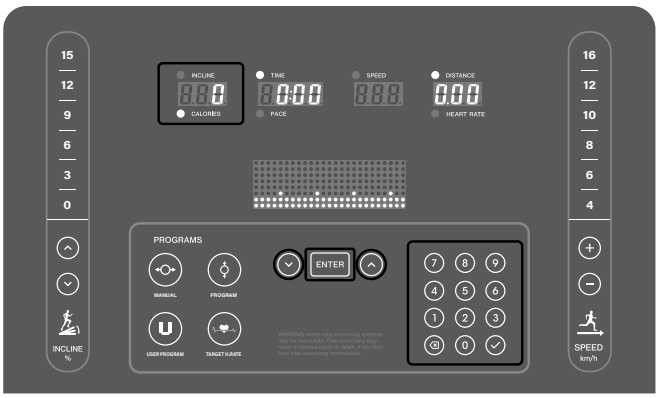

FIGURE 9

FIGURE 10

FIGURE 11

3.7.1 Programme Overview

Options \ Time Zone		Set time /25 = Each segment of the running time																								
		1	2	3	4	5	6	7	8	9	10	11	12	13	14	15	16	17	18	19	20	21	22	23	24	25
P01	SPEED	3	4	5	5	6	5	5	4	5	5	6	5	5	4	5	5	6	5	5	4	5	5	6	5	5
	INCLINE	2	2	3	2	3	2	3	2	3	3	2	2	3	3	2	2	3	3	2	2	3	2	3	2	2
P02	SPEED	3	5	6	7	7	6	6	7	7	6	6	7	7	6	6	7	7	6	6	7	7	6	6	5	3
	INCLINE	3	4	5	5	4	4	3	3	4	4	5	5	4	4	3	3	4	4	5	5	4	4	3	3	3
P03	SPEED	5	10	6	11	7	12	8	12	9	6	10	7	11	8	12	7	12	9	6	10	7	11	9	6	3
	INCLINE	3	4	5	6	5	4	5	6	5	4	5	6	5	4	5	6	5	4	5	6	5	4	5	4	3
P04	SPEED	5	7	8	9	9	9	8	8	9	9	9	8	8	9	9	9	8	8	9	9	9	8	8	7	5
	INCLINE	2	2	3	3	4	4	3	3	4	4	3	3	4	4	3	3	4	4	3	3	4	4	3	2	2
P05	SPEED	5	8	10	11	11	10	10	9	9	10	10	11	11	10	10	9	9	10	10	11	11	10	10	8	5
	INCLINE	3	3	4	4	5	5	4	4	5	5	4	4	5	5	4	4	5	5	4	4	5	5	4	3	3
P06	SPEED	4	6	7	8	9	10	10	9	9	10	10	10	9	9	10	10	10	9	9	10	10	9	8	7	6
	INCLINE	0	0	1	1	1	2	2	2	1	1	1	0	0	1	1	2	2	2	1	1	2	2	1	1	1
P07	SPEED	4	7	8	8	9	9	10	8	8	9	9	10	9	8	9	9	8	8	10	9	9	8	8	5	3
	INCLINE	2	5	1	4	2	6	4	6	3	0	1	5	2	6	3	0	2	6	4	6	3	0	1	5	2
P08	SPEED	4	6	8	9	9	8	8	9	9	9	8	8	8	9	9	9	8	8	8	9	9	8	8	9	9
	INCLINE	6	8	12	6	11	8	10	6	8	10	12	10	8	12	7	10	10	8	6	12	10	8	10	8	6
P09	SPEED	5	7	10	11	12	11	11	10	9	10	11	11	12	11	11	10	10	9	8	8	12	11	11	7	4
	INCLINE	2	3	4	5	6	6	5	5	4	4	5	5	6	6	5	5	4	4	6	6	5	5	4	4	3
P10	SPEED	6	8	10	11	12	12	11	9	10	11	12	11	10	11	12	10	12	12	11	10	11	12	8	8	4
	INCLINE	4	5	6	7	6	5	6	7	6	5	6	7	6	5	6	7	6	7	5	5	6	7	6	5	4
P11	SPEED	6	9	11	12	12	12	11	11	10	11	12	12	11	12	12	11	11	12	12	11	11	12	12	9	6
	INCLINE	2	4	6	8	7	6	7	8	7	6	7	8	7	6	7	8	7	8	6	7	8	7	6	3	2
P12	SPEED	3	6	8	8	8	9	9	8	8	8	9	9	8	8	8	9	9	8	8	8	9	9	7	5	3
	INCLINE	2	2	3	3	3	2	2	3	3	3	2	2	3	3	3	2	2	3	3	3	2	2	3	3	2
P13	SPEED	5	7	9	10	10	11	11	12	11	11	10	10	11	11	12	11	11	10	10	11	11	10	9	7	3
	INCLINE	3	3	4	4	5	4	4	3	4	4	5	5	4	4	4	5	5	4	4	3	4	4	5	4	3
P14	SPEED	5	8	9	9	9	10	10	9	9	9	10	10	9	9	9	10	10	9	9	9	10	10	8	5	3
	INCLINE	2	3	4	4	4	3	3	4	4	4	3	3	4	4	4	3	3	4	4	4	3	3	4	2	2
P15	SPEED	5	6	7	8	8	8	9	9	9	8	8	8	9	9	9	8	8	8	9	9	8	8	8	5	3
	INCLINE	1	1	2	3	3	3	2	2	2	3	3	3	2	2	2	3	3	3	2	2	3	3	3	2	1
P16	SPEED	4	5	6	6	7	7	7	8	7	7	6	6	7	7	7	8	7	7	6	6	8	7	7	6	3
	INCLINE	0	0	1	1	1	1	1	0	1	1	1	1	1	1	1	0	1	1	0	1	1	1	1	0	0
P17	SPEED	5	8	9	10	10	10	10	10	10	10	10	10	10	10	10	10	10	10	10	10	10	10	8	9	5
	INCLINE	0	0	0	0	0	0	0	0	0	0	0	0	0	0	0	0	0	0	0	0	0	0	0	0	0
P18	SPEED	5	9	11	11	12	12	13	13	12	12	13	13	12	12	13	13	12	12	13	13	12	12	10	7	5
	INCLINE	0	0	0	0	0	0	0	0	0	0	0	0	0	0	0	0	0	0	0	0	0	0	0	0	0
P19	SPEED	5	10	12	12	13	13	14	14	13	13	14	14	13	13	14	14	13	13	12	12	11	11	10	8	5
	INCLINE	0	0	0	0	0	0	0	0	0	0	0	0	0	0	0	0	0	0	0	0	0	0	0	0	0
P20	SPEED	5	10	12	12	14	14	15	15	14	14	15	15	14	14	15	15	14	14	15	15	12	12	10	8	5
	INCLINE	0	0	0	0	0	0	0	0	0	0	0	0	0	0	0	0	0	0	0	0	0	0	0	0	0

Figure 12

3.8 Custom programme

You can create your own profile programme by individually setting the speed and incline for up to 25 segments. Each user profile can store one user programme.

ⓘ **NOTE**

+ If you set a target for time, distance or calories, the workout will end automatically as soon as one of the targets is reached.
+ If you only want to train for one target, enter only the corresponding value.

To create a user programme:

1. Select USER PROGRAMME (Figure 13).
2. Confirm with ENTER.
3. Set the speed for each segment using the arrow keys (^/v) (Figure 14).

The segment currently being edited flashes.

4. Confirm with ENTER.
5. **Optional**: Press and hold ENTER for two seconds to switch directly to the incline.

5.1. Set the incline for each segment using the arrow keys (Figure 15).

6. Confirm with ENTER.
7. **Optional**: Press and hold ENTER for two seconds to go directly to time, distance and calories.

7.1. Repeat this process until all desired segments are set.

8. Once you have set all segments (max. 25), press and hold ENTER for two seconds to switch to the settings for time, distance and calories.
9. Set the time, distance and calories (Figure 16).
10. Confirm each value with ENTER.
11. If you do not set any target values, press START/PAUSE to begin the workout.

The values are counted up.

12. Press START/PAUSE to start training with the user programme you have created.
13. To pause the training, press START/PAUSE.
14. To resume the training, press START/PAUSE.
15. To end the training, press STOP.

FIGURE 13

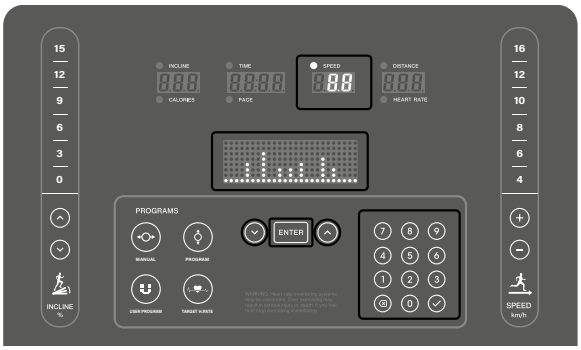

FIGURE 14

3.9 Target heart rate programme

⚠ **WARNING**
Your training device is not a medical device. The heart rate measurement of this device may be inaccurate. Various factors can affect the accuracy of the heart rate display. The heart rate display is only intended as a training aid.

You can choose between four programmes: 55%, 75% or 90% of your maximum heart rate, as well as the TAG programme, in which you manually set a target heart rate.

ⓘ **NOTE**

+ The maximum heart rate is calculated based on your age (formula: 220 – age).
+ If you are not using a chest strap, your hands must remain on the hand pulse sensors throughout the workout.
+ If you set a target for time, distance or calories, the workout will end automatically as soon as one of the targets is reached.
+ If you only want to train for one target, enter only the corresponding value.

To start the heart rate controlled programme:

1. Select TARGET H. RATE (Figure 17).
2. Confirm with ENTER.
3. Set your age using the arrow keys (^/v) (Figure 18).
4. Confirm with ENTER.
5. Select one of the four programmes (55%, 75%, 90% or TAG) using the arrow keys (Figures 19–20).
6. Confirm with ENTER.
7. Set the time, distance and calories.
8. Confirm each value with ENTER.
9. **Optional**: If you do not set any target values, press START/PAUSE to begin the workout.

The values will be counted up.

10. Press START/PAUSE to begin the workout.
11. To pause the training, press START/PAUSE.
12. To resume the training, press START/PAUSE.
13. To end the training, press STOP.

FIGURE 17

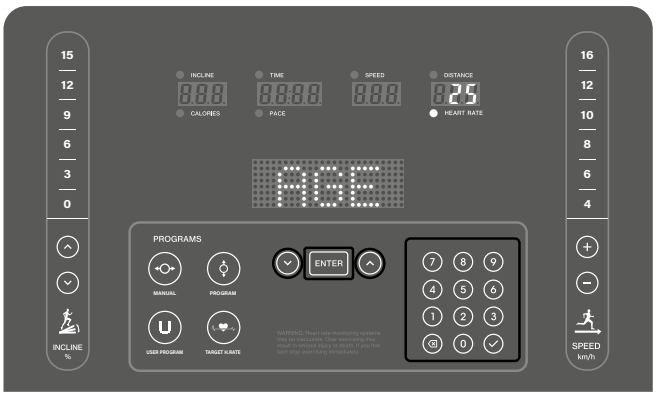

FIGURE 18

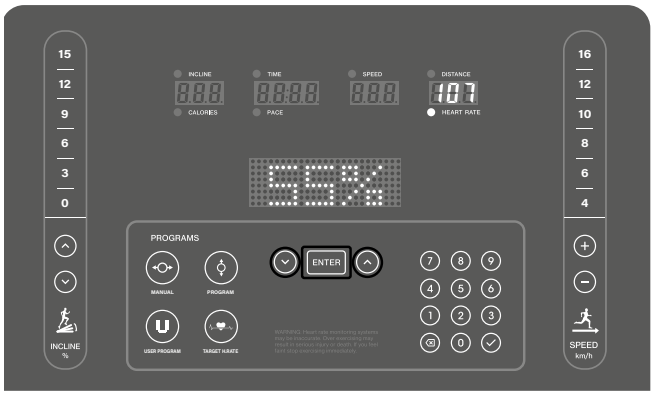

FIGURE 19

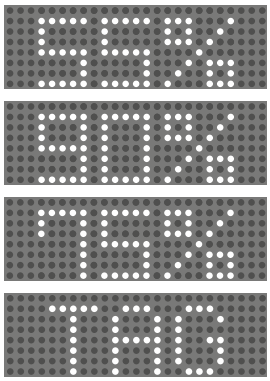

FIGURE 20

4.1 General Instructions

When training, it is important to perform the exercises correctly in order to avoid injuries and achieve the desired training effect. Make sure you use the correct technique and train at an appropriate intensity level. Always consult an expert such as a trainer or doctor if you are unsure or have health problems. Always start your training with a low load and increase it evenly and gently.
End your training with a cool-down phase. If you have any questions or uncertainties, contact your doctor.

4.1.1 Training clothes

During training, wear appropriate sports clothing that is comfortable and breathable. Avoid clothing that restricts you or is uncomfortable. Make sure that your shoes are suitable and offer you sufficient support. In addition, always carry a towel with you to wipe away sweat and keep the equipment clean.

4.1.2 Warming up and stretching

It is important to warm up and stretch properly before training to avoid injury and improve performance. Stretching helps to loosen muscles and improve flexibility. Be sure to incorporate a short stretching routine before each workout.

Warm-up exercise:

1. Stand upright with your feet about shoulder-width apart.
2. Start with gentle arm circles by slowly moving your arms forwards in small circles in a controlled manner.
3. Perform arm circles backwards to loosen your shoulders and arms.
4. Do squats by slowly squatting down and then straightening up again. Make sure that your knees do not extend beyond your toes.

⚠ **CAUTION**
Do not exercise with sore muscles or take it easy on the affected muscles, as this can lead to injuries.

4.1.3 Medication

If you regularly take medication and want to exercise, it is important to be aware of possible side effects. Ask your doctor whether your medication affects your workout.

4.1.4 Used muscle groups

Running uses the following muscle groups:

+ Gluteal muscle
+ Leg muscles

Make sure you keep your back straight during training. Do not hunch over and do not arch your back.

4.1.5 Exercise frequency

Regular exercise is crucial to making progress and staying healthy in the long term. Continuous exercise can strengthen muscles, improve endurance and enhance overall well-being. Remember that even small workouts can be done regularly to achieve long-term results.

Training with heart rate orientation
Heart rate orientation guarantees an extremely effective and healthy training. Through your age and the following table, you can quickly and easily read and determine the optimal pulse for your training. An acoustic alarm will sound if your heart rate exceeds the set target heart rate. Which target heart rate is important for which training goal can be found out in the following.

Fat burning (weight management): The main goal here is to burn deposits of fat. In order to achieve this training goal, a low training intensity (approximately 55% of the maximum heart rate) and a longer training period are required.

Cardiovascular training (cardio training): The primary goal is to increase stamina and fitness through an improved provision of oxygen through the cardiovascular system. In order to achieve this training goal, medium intensity (approximately 75% of the maximum heart rate) with a medium training period is required.

Anaerobic (maximum) load training: The main goal of maximum load training is to improve recovery after short, intense loads in order to be able to quickly return to the aerobic zone. In order to achieve this training goal, a high intensity (approximately 90% of the maximum heart rate) with short, intense load is required, which is followed by a recovery phase in order to prevent muscle fatigue.

Example:
For a 45-year-old man, the maximum heart rate is 175 (220 - 45 = 175).

+ The fat burning target zone (55%) is at approximately 96 beats/min. = (220 - age) x 0.55.
+ The cardio target zone (75%) is at approximately 131 beats/min. = (220 - age) x 0.75.
+ The maximum heart rate for an anaerobic load training (90%) is at approximately 157 beats/min. = (220 - age) x 0.9.

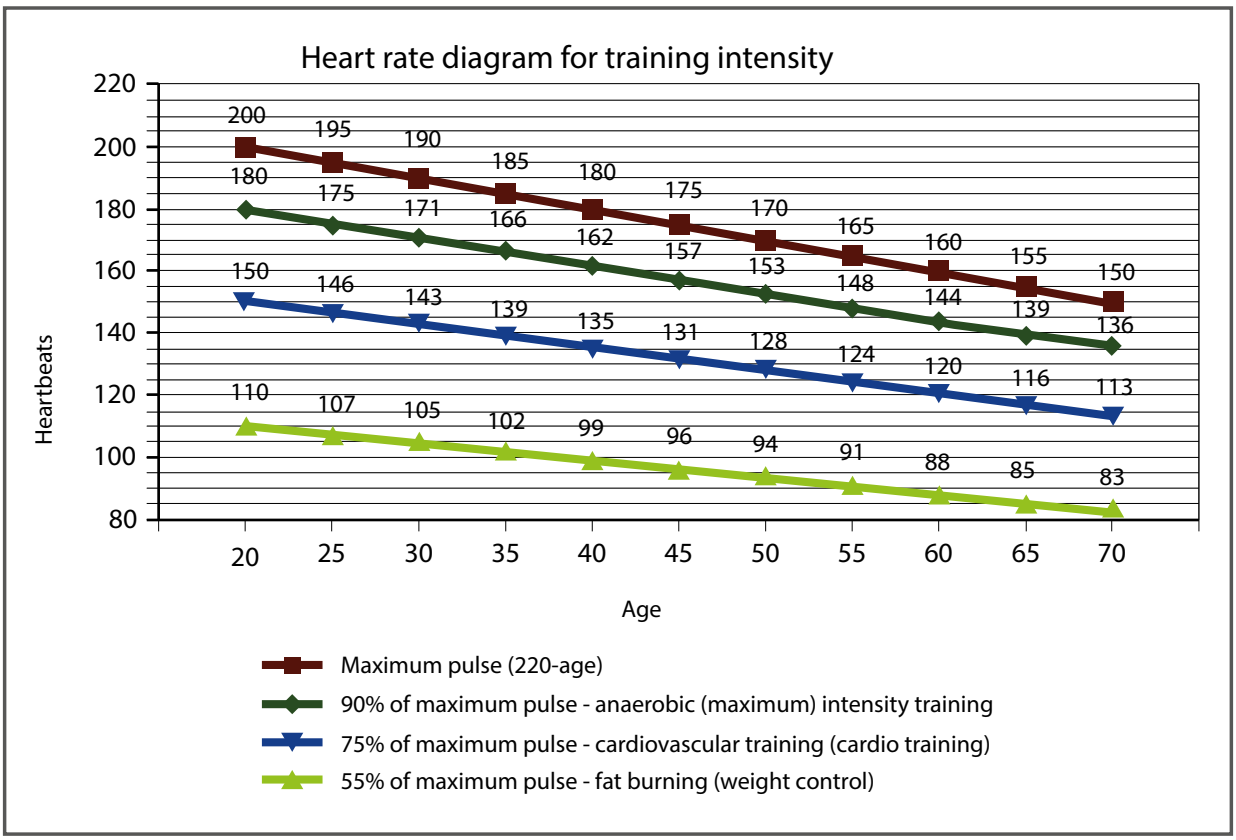

4.2 Workout journal

(Copy template)

Date | Distance | Time (min.) | Resistance level | Training weight | Ø Pulse | Calories burnt | I feel ... | Body weight

4.3 Wireless Connection and Fitness Apps

This console is equipped with a wireless interface. Please take note that your mobile device needs to be compatible with the wireless interface of the treadmill.

To use training apps you will have to activate the wireless connection function on your mobile device (tablet or smart phone) and start the fitness app. Select your fitness equipment. Please follow the instructions given in the app. You will find the name of your fitness euqipment on a small sticker on the back of the console.

You will find the fitness apps in the app stores of Google or Apple. There you will find the apps "Kinomap" or "Zwift". Please note that these apps are produced by an external manufacturer. Fitshop does not take any responsibility regarding the availability, functionality or contents of these programmes.

ⓘ IMPORTANT NOTE

Some entertainment apps are provided and maintained by third-party providers. Pre-installed apps may change, be updated, or be removed over time. These changes are normal and do not affect your statutory warranty rights. To make sure the pre-installed apps are working correctly, they must be updated regularly. If needed, the respective app will notify you to do so. To update the app, you need a google account. A google email is sufficient. Just follow the instructions on the screen to perform the update. Please note: The system is set up only for the pre-installed apps. Do not install any additional apps as their proper functionality can not be guaranteed. The installation of other apps might cause technical issues.

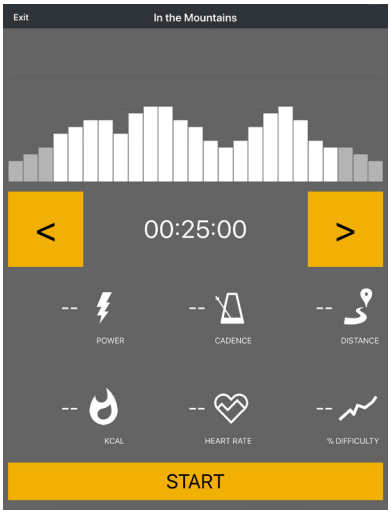

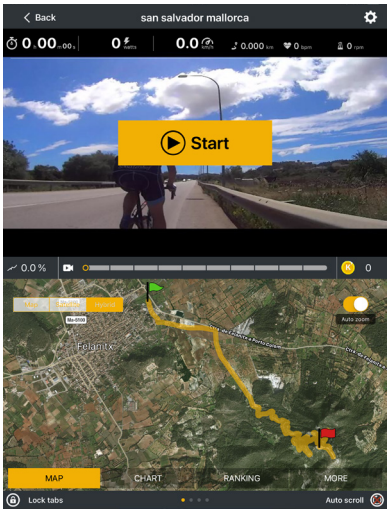

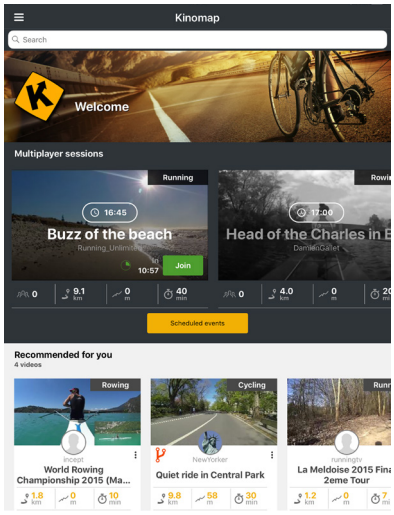

Example: Kinomap

5.1 General Instructions

⚠ **WARNING**

+ The storage location should be chosen so that improper use by third parties or children can be prevented.
+ If your equipment does not have transportation wheels, the equipment must be disassembled before transportation.

► **ATTENTION**

+ Make sure that the equipment is protected from moisture, dust and dirt in the selected storage location. The storage location should be dry and well ventilated and have a constant ambient temperature between 10°C and 35°C.

5.2 Transportation Wheels

► **ATTENTION**

If you want to transport your equipment over particularly sensitive and soft floor coverings, such as parquet, planks or laminate, lay out the transport route with cardboard or similar to avoid possible floor damage.

1. Stand behind the equipment and lift it until the weight is transferred to the transportation wheels. After that, you easily can move the equipment to a new position. For long transport distances the equipment should be disassembled and safely packed.
2. Select the new location by following the instructions in the section 1.4 of this manual.

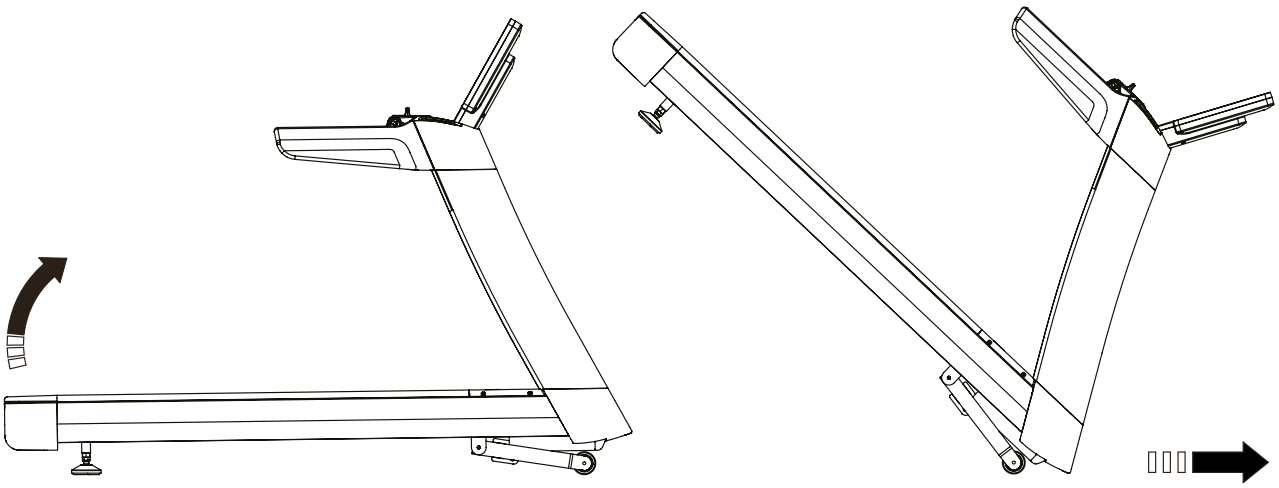

6.1 General Instructions

⚠ **WARNING**

+ Do not make any improper changes to the equipment.

⚠ **CAUTION**

+ Damaged or worn components may affect your safety and the life of the equipment. Therefore, immediately replace damaged or worn components. In such a case, contact the contract partner. The equipment must not be used until it has been repaired. If necessary, use only original spare parts.

► **ATTENTION**

+ In addition to the instructions and recommendations for maintenance and care given here, additional service and/or repair work may be necessary; this must only be carried out by authorised service technicians.

6.2 Faults and Fault Diagnosis

The equipment undergoes regular quality controls during production. Nevertheless, faults or malfunctions may occur. Frequently, individual parts are responsible for these disturbances, an exchange is usually sufficient. Please refer to the following overview for the most common errors and how to correct them. If the equipment still does not function properly, contact your contract partner.

Fault	Cause	Solution
Console is not responding	Safety key missing or not inserted correctly	Check whether Safety Key is inserted and insert if necessary
Running mat slanting Grinding noises	Running mat not centered	Adjust the running mat according to the instructions
Running mat slips through/stops	Tape tension/lubrication not correct	Check belt tension/lubrication according to instructions
Display is blank/is not working	+ Interrupted power connection + Loose cabel connections	+ Power switch to on + Check whether Safety Key is plugged in + Check cable connections
No pulse display	+ Sources of interference in the room + unsuitable chest strap + Wrong position of chest strap + Chest strap defective or battery empty + Pulse display defective	+ Eliminate sources of interference (e.g. mobile phone, WLAN, lawn mower and vacuum cleaner robot, etc. ...) + Use a suitable chest strap (see RECOMMENDED ACCESSORIES). + Reposition chest strap and/or moisten electrodes + Changing batteries + Check if pulse display by hand pulse possible

6.3 Error Codes and Troubleshooting

The electronics of the equipment continuously carries out tests. In case of deviations, an error code appears on the display and normal operation is stopped for your safety.

Please contact the contract partner for technical support.

6.4 Care and Maintenance

The most important maintenance measure is the care of the running mat. This includes adjustment, re tensioning and lubrication of the running mat. Damage resulting from insufficient or neglected care is not covered by the warranty. You should therefore carry out maintenance checks at regular intervals. Be very careful when adjusting and tightening the running mat, as a strong over voltage or under voltage can cause damage to the equipment. The running mat is adjusted at the factory according to the regulations before delivery. However, it may happen that the running mat slips during transport.

By scanning the QR-code with the camera function or QR-code scanner app of your smartphone/tablet, a video on general maintenance of a treadmill opens on YouTube. The video serves to illustrate the maintenance points described in this manual.

Please note that the video may not be available in your language or with appropriate subtitles.

If you cannot scan QR-codes, you can access all Fitshop videos on YouTube by first opening YouTube and entering "Fitshop" in the search field.

6.4.1 Adjusting the Running Mat

During training, the running mat should run as centrally and straight as possible. The alignment of the running mat can change depending on the stress and load. Another reason can be the positioning of the equipment on an uneven surface.

⚠ **CAUTION**
During the following maintenance nobody must be on the treadmill!

1. Let the treadmill run at a speed of 5 km/h.
2. If the running mat deviates to the left, turn the left adjusting screw at the rear end of the device max. one ¼ turn clockwise and the right adjusting screw max. one ¼ turn anticlockwise.
3. If the running mat deviates to the right, turn the right adjusting screw at the rear end of the device max. ¼ turn clockwise and the left adjusting screw max. ¼ turn anticlockwise.
4. Then observe the mat for about 30 seconds, as the change is not immediately visible.
5. Repeat this procedure until the running mat is straight again. If the running mat cannot be adjusted, please contact your contract partner.

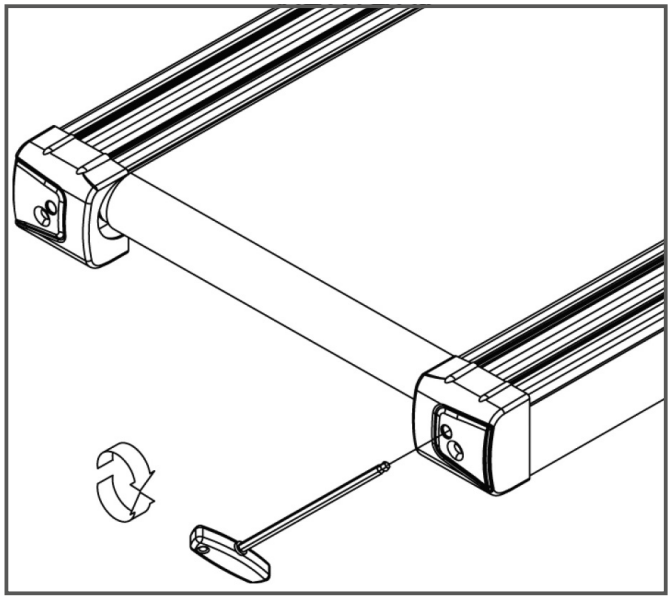

6.4.2 Re-tensioning the Running Mat

If the running mat slips over the rollers during operation (if this is the case, there is a noticeable jerk during running), the running mat must be re tightened.

In most cases, the slipping is caused by stretching of the mat through use. This is perfectly normal.

ⓘ **NOTICE**
Re-tensioning is carried out using the same adjusting screws that are used for adjustment.

1. Let the treadmill run at a speed of 5km/h.
2. Turn the left and right adjusting screws directly one after the other, max. one ¼ turn clockwise.
3. Then check whether the running mat continues to slip. If this is the case, you must perform the described procedure again.

6.4.3 Lubricating the Running Mat

If the running mat is not sufficiently lubricated, friction increases significantly and this leads to heavy wear of the endless belt, running plate, motor and circuit board. If you feel an increased friction of the running mat, this is an indication that you should lubricate the mat. However, lubrication should be carried out at least every 3 months or every 50 operating hours. Whichever case comes first.

ⓘ **NOTICE**
If your treadmill is equipped with a folding mechanism, you can also lubricate it when it is folded.

1. Raise the running mat slightly.
2. Apply some silicone oil or silicone spray to the entire deck and distribute evenly.
3. Continue turning the belt by hand so that the entire surface between the endless belt and the running plate is lubricated.
4. Wipe off the excess silicone oil or silicone spray.

ⓘ **NOTICE**
This maintenance must also be carried out after prolonged non-use of the equipment.

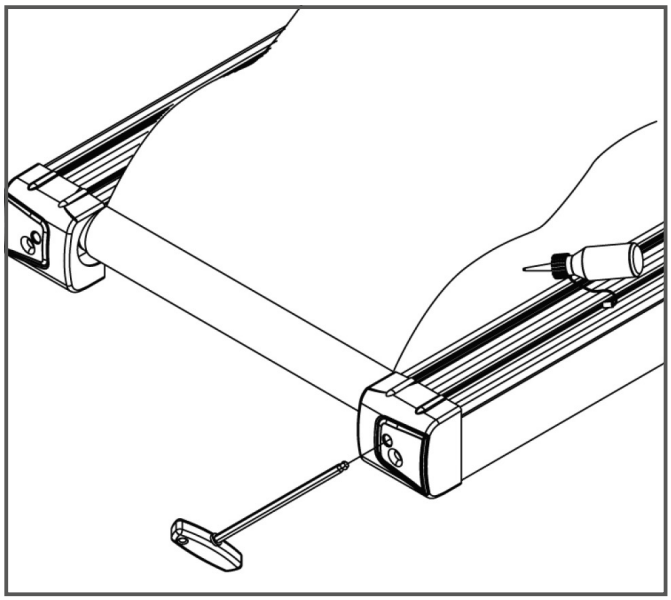

6.5 Maintenance and Inspection Calendar

To avoid damage from body sweat, the equipment must be cleaned with a damp towel (no solvents!) after each training session.

The following routine tasks must be performed at the specified intervals:

Part	Weekly	Monthly	Quarterly
Display console	C	I	
Tension of the running mat			I
Lubrication of the running mat			I
Plastic covers	C	I	
Screws and cable connections			I
Legend: C = clean; I = inspect			

7 DISPOSAL

At the end of its operational life, this equipment cannot be disposed of in normal household waste. Instead, it must be disposed of via an electricals recycling centre. Further information can be obtained from your local authority's recycling service.

The materials can be recycled as per their symbols. Through the reuse, recycling of materials or other forms of recovery of old equipment, you make an important contribution to the protection of the environment.

8 RECOMMENDED ACCESSORIES

To make your training experience even more efficient and pleasant, we recommend that you add suiting accessories to your fitness equipment. For elliptical cross trainers this could for example be a **floor mat**, which makes your fitness equipment stand more securely and also protects the floor from sweat or **silicone spray** to keep moving parts in good shape.

If you have purchased a fitness machine with pulse training and want to train your heart rate, we strongly recommend that you use a compatible **chest strap**, as this ensures optimum transmission of the heart rate.

Our range of accessories offers the highest quality and makes training even better. If you would like to find out more about compatible accessories, please go to the detail page of the product in our webshop (the easiest way is to enter the article number in the search field above) and go to the recommended accessories on this page. Alternatively, you can use the QR-code provided. Of course, you can also contact our customer service: by telephone, e-mail, in one of our branches or via our social media channels. We will be happy to advise you!

chest strap

floor mat

lubricant

9.1 Serial Number and Model Name

In order to provide you with the best possible service, please have the model name, article number, serial number, exploded drawing and parts list ready. The corresponding contact options can be found in chapter 11 of this operating manual.

ⓘ **NOTICE**
The serial number of your equipment is unique. It's located on a white sticker. The exact position of this sticker is shown in the following illustration.

Enter the serial number in the appropriate field.

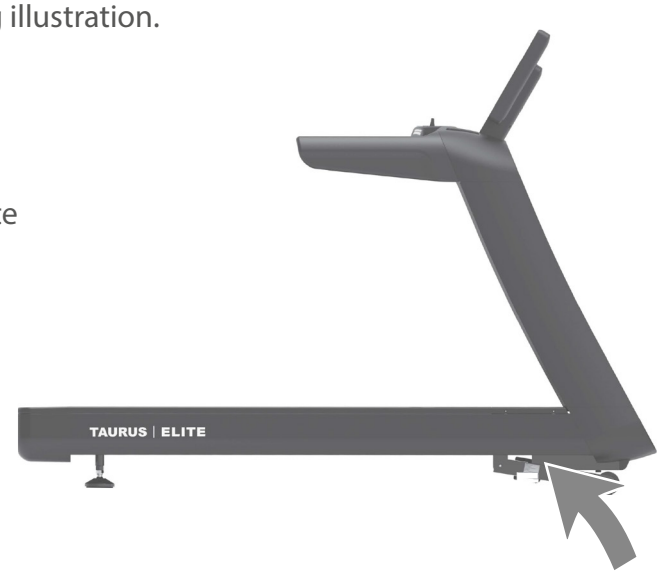

Serial number:

Brand / Category:

Taurus / treadmill

Model Name:

Taurus Elite Treadmill

SKU:

TF-ETM

9.2 Parts List

No.	Name	Qty.
1	MAIN FRAME	1
2	MOUNTING PLATE	2
3	FRONT ROLLER Φ115xΦ90x678mm	1
4	REAR ROLLER Φ90xΦ25x662mm	1
5	U SHAPE CAP	3
6	SCREW ST5x12mm	8
7	SCREW M5x10mm	7
8	SCREW ST3.9x14mm	130
9	SCREW M4x10mm	5
10	SCREW M6x16mm	4
11	SCREW M8x40mm	2
12	SCREW M10x25mm	4
13	SCREW M10x40mm	1
14	SCREW M10x90mm	2
15	SCREW M8x40mm	1
16	SCREW M10x25mm	14
17	SCREW M10x50mm	1
18	SCREW M8x40mm	6
19	SCREW M8x50mm	2
20	SPRING WASHER Φ10x2.5T	13
21	WASHER Φ8.5xΦ17x2T	10
22	WASHER Φ10xΦ20x2T	13
23	SPRING WASHER Φ10x2.5T,BLACK	8
24	NUT M6x12T	2
25	NUT M8x7T	8
26	NUT M10x10T	6
27	MOTOR FRONT COVER	1
28	MOTOR COVER	1
29	DUST PROOF COVER	1
30	REAR LEFT COVER	1
31	REAR RIGHT COVER	1
32	SHOCK ABSORBING PAD	6

33	CUSHION PAD	6
34	ADJUSTED PAD	2
35	RUNNING BELT	1
36	BELT	1
37	RUNNING BOARD	1
38	UP STRIP COVER	2
39	SIDE STRIP LEFT COVER	1
40	SIDE STRIP RIGHT COVER	1
41	STRAP	6
42	STRAP	2
43	FIXING CLIP	24
44	INCLINE FRAME PAD	1
45	ADJUSTING RING	2
46	MOTOR	1
47	INCLINE MOTOR	1
48	VARIABLE FREQUENCY DRIVE	1
49	WASHER Φ10xΦ20x2T,BLACK	18
50	BOAT-SHAPED POWER SWITCH	1
51	CONCAVE PLUG	1
52	OVERLOAD PROTECTOR	1
53	BLUE CONNECTING WIRE 500mm	1
54	BLUE CONNECTING WIRE 300mm	1
55	BLUE CONNECTING WIRE 100mm	1
56	BROWN CONNECTING WIRE 100mm	1
57	BROWN CONNECTING WIRE 400mm	1
58	POWER GROUNDING WIRE 150mm	1
59	POWER GROUNDING WIRE 100mm	1
60	FILTER	1
61	LEFT SUPPORTING TUBE	1
62	LEFT OUTER SIDE COVER	1
63	LEFT INNER SIDE COVER	1
64	CHAIN COVER STICK	26
65	FOAMED MIDDLE LEFT HANDLE	1
66	RIGHT SUPPORTING TUBE	1

67	RIGHT OUTER SIDE TUBE	1
68	RIGHT INNER SIDE TUBE	1
69	CONNECTING WIRE 1800mm	1
71	INCLINE FRAME	1
72	INCLINE FRAME TUBE	2
73	PLASTIC BEARING	4
74	PLASTIC WASHER COVER	2
75	INCLINE WHEEL	2
76	CUSHION PAD	2
77	SCREW M10x65mm	2
78	SCREW M10x70mm	2
79	SCREW M10x75mm	1
80	CONSOLE SUPPORTING FRAME	1
81	FOAMED MIDDLE RIGHT HANDLE	1
82	FOAMED LEFT HANDLE	1
83	LEFT HAND GRIP HEART RATE BASEMENT	1
84	LEFT HAND GRIP OUTER STEEL PLATE	1
85	LEFT HAND GRIP INNER STEEL PLATE	1
86	CONNECTING WIRE 1200mm	2
87	SCREW ST3.9x25mm	4
88	FOAMED RIGHT HANDLE	1
89	RIGHT HAND GRIP HEART RATE BASEMENT	1
90	RIGHT HAND GRIP OUTER STEEL PLATE	1
91	RIGHT HAND GRIP INNER STEEL PLATE	1
92	CONSOLE PANEL FIXING FRAME	1
93	CONSOLE FIXING TUBE	2
94	SCREW ST2.9x8mm	15
95	SCREW ST3.9x10mm	2
96	STRAP	2
97	CONSOLE UPPER COVER	1
98	CONSOLE BOTTON COVER	1
99	SPEAKER COVER	2
100	CONSOLE-LED	1
101	USB PANEL	1

103	CONNECTING WIRE 500mm	1
104	CONNECTING WIRE 600mm	1
106	CONNECTING WIRE 600mm	2
107	INDUCTOR	1
108	CONSOLE UPPER COVER	1
109	CONSOLE DECORATION COVER	1
110	CONSOLE BOTTOM COVER	1
111	SAFTY SWITCH BOX UPPER COVER	1
112	SAFTY SWITCH BOX BOTTOM COVER	1
113	RECOVERING SWITCH COVER	1
114	RECOVERING SWITCH BASEMENT	1
115	RECOVERING FIXING BASEMENT	1
116	RECOVERING SWITCH BUTTON	1
117	URGENT STOP BUTTOM	1
118	INCLINE SWITCH ASSEMBLY	1
119	SPEED SWITCH ASSEMBLY	1
120	CONNECTING WIRE 800mm	1
122	URGENT STOP BUTTOM ASSEMBLY	1
123	URGENT STOP PANEL	1
124	CONNECTING WIRE 500mm	1
125	CONNECTING WIRE 300mm	1
126	FILM BUTTOM STICKER	1
127	SCREW M6x20mm	4
128	SCREW ST2.9x12mm	6
129	CONNECTING WIRE 1800mm	1
130	POSITIONING PLUG	1
131	C CLIP Φ6	2
132	SPRING	1
133	SPRING	2
134	SPRING	1
135	OVERLAY	1

9.3 Exploded Drawing

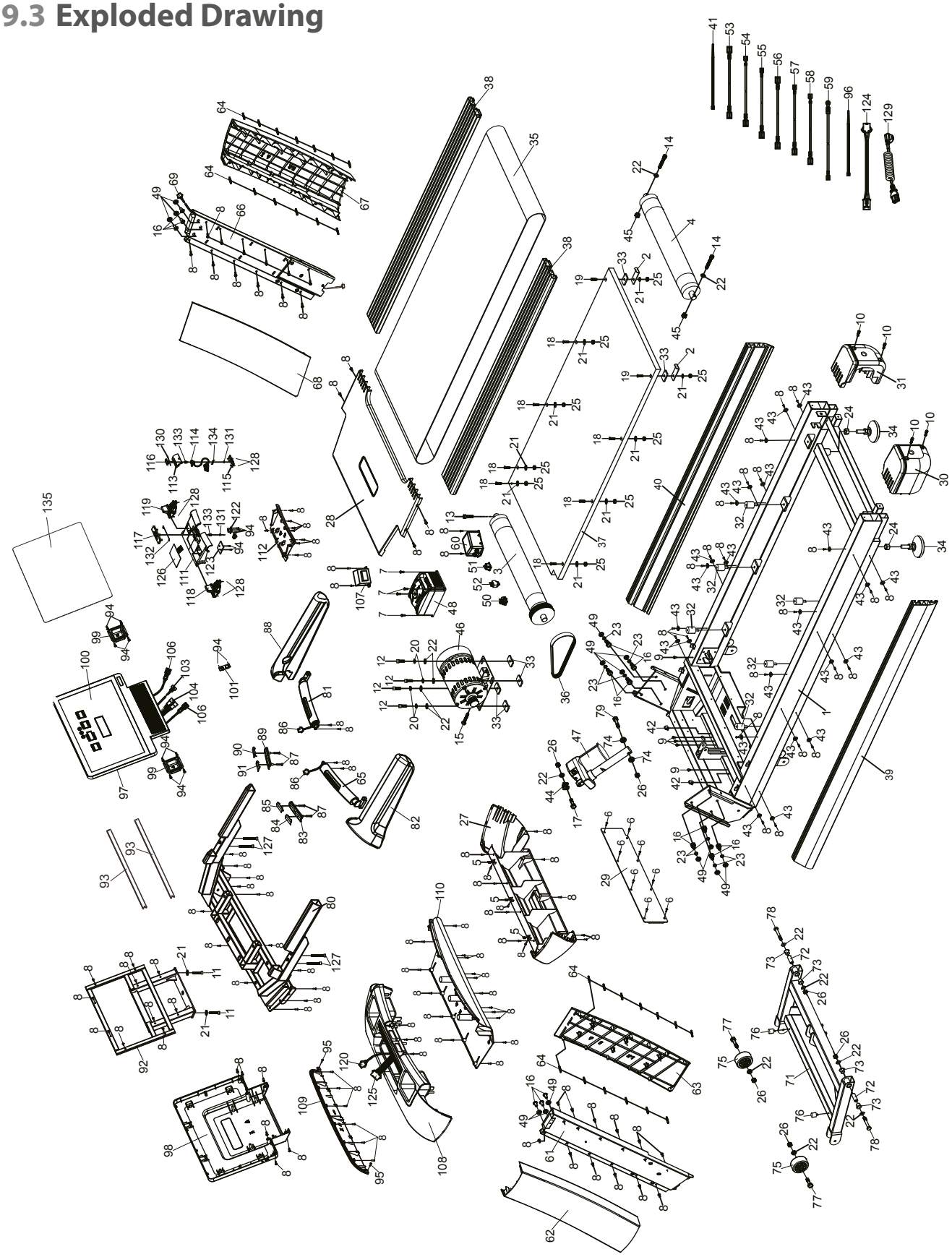

136	STICKER	1
137	STICKER	1
138	STICKER	1
139	STICKER	1
140	STICKER	2
141	STICKER	1
142	STICKER	1

10 WARRANTY

Products from TAURUS® are subject to strict quality control. However, if a fitness equipment purchased from us does not work perfectly, we take it very seriously and ask you to contact our customer service as indicated. We are happy to help you by phone via our service hotline.

Error Descriptions
Your fitness equipment is developed for long-term, high-quality training. However, should a problem arise, please first read the operating instructions. For further assistance, please contact your contract partner or call our service hotline. To ensure your problem is solved as quickly as possible, please describe the defect as exactly as possible.

In addition to the statutory warranty, we provide a warranty for every fitness equipment purchased from us according to the following provisions.

Your statutory rights are not affected.

Warrantee
The warrantee is the first/original buyer.

Warranty periods
The following warranty periods begin on delivery of the fitness equipment.

Warranty period
The warranty periods, shown on our web shop, begin on delivery of the fitness equipment. The respective warranty periods for your equipment can be found on its product website.

Repair Costs
According to our choice, there will either be a repair, a replacement of individual damaged parts or a complete replacement. Spare parts, that have to be mounted while assembling the equipment, have to be replaced by the warrantee personally and are not a part of repair. After the expiration of the warranty period, the responsibility for parts costs, repair costs, installation costs and delivery costs lies with the warranty holder.

The terms of use are defined as follows:

+ Home use: solely for private use in private households up to 3 hours per day
+ Semi-professional use: up to 6 hours per day (e. g. rehabilitation centres, hotels, clubs, company gyms)
+ Professional use: more than 6 hours per day (e. g. commercial gyms)

Warranty Service
Within the warranty period, equipment which develops faults as a result of material or manufacturing defects, will be repaired or replaced at our discretion. Ownership of equipment or parts of equipment which have been replaced is transferred to us. The warranty period is not extended nor does a new warranty period begin following repair or replacement under the warranty.

Warranty Conditions
For the warranty to be valid, the following steps must be taken:

Please contact our customer service by email or phone. If the product under warranty has to be sent in for repair, the seller bears costs. After expiry of the warranty, the buyer bears the costs of transport and insurance. If the fault is covered by our warranty, you will receive a new or repaired equipment in return.

Warranty claims are invalid in case of damage resulting from:

+ misuse or improper handling
+ environmental influences (moisture, heat, electrical surge, dust, etc.)
+ failure to follow the current safety measures for the equipment
+ failure to follow the operating instructions
+ use of force (e. g. hitting, kicking, falling)
+ interventions which were not carried out by one of our authorized service centres
+ unauthorised repair attempts

Proof of Purchase and Serial Number
Please make sure that you are able to provide the appropriate receipt when claiming on your warranty. So that we can clearly identify the model of your equipment, and for the purposes of our quality control, you will need to give the serial number of your equipment, when contacting the service team. Where possible please have your serial number and your customer number ready when you call our service hotline. It will help us to deal with your request swiftly.

If you cannot find the serial number on your fitness equipment, our service team is at your disposal to offer further information.

Service outside of the Warranty Period
We are also happy to issue an individual cost estimate if there is a problem with your fitness equipment after the warranty has expired, or in cases which do not fall under the terms of the warranty, e. g. normal wear and tear. Please contact our customer service team to find a quick and cost-effective solution to your problem. In such a case you will be responsible for the delivery costs.

Communication
Many problems can be solved just by speaking to us as your specialist supplier. We know how important it is to you as a user of the fitness equipment to have problems solved quickly and simply, so you can enjoy working out with minimal interruption. For that reason, we also want to resolve your queries quickly and in a straightforward manner. Thus, please always keep your customer number and the serial number of the faulty equipment handy.

11 CONTACT

DE

TECHNIK

+49 4621 4210-900
+49 4621 4210-698
technik@fitshop.de
Öffnungszeiten entnehmen Sie unserer Homepage.

SERVICE

0800 20 20277 (kostenlos)
04621 4210 - 0
info@fitshop.de
Öffnungszeiten entnehmen Sie unserer Homepage: https://stg.fit/statita

DK

TEKNIK OG SERVICE

80 90 16 50
+49 4621 4210-945
info@fitshop.dk
Åbningstider kan findes på hjemmesiden: https://stg.fit/statit7

UK

CUSTOMER CARE

+44 141 737 2249 or +44 141 876 3972
customercare@fitshop.co.uk
You can find the opening hours on our homepage: https://stg.fit/statitd

FR

TECHNIQUE & SERVICE

+33 (0) 189 530984
+49 4621 42 10 933
info@fitshop.fr
Vous trouverez les heures d'ouverture sur notre site Internet: https://stg.fit/statit4

BE

TECHNIQUE & SERVICE

02 732 46 77
+49 4621 4210 933
info@fitshop.be
Vous trouverez les heures d'ouverture sur notre site Internet: https://stg.fit/statit8

ES

TECNOLOGÍA Y SERVICIOS

38 805 790
info@fitshop.es
Consulta nuestro horario de apertura en la página web: https://stg.fit/statit5

NL

TECHNISCHE DIENST & SERVICE

+31 172 619961
service@fitshop.nl
De openingstijden vindt u op onze homepage: https://stg.fit/statit3

INT

TECHNICAL SUPPORT & SERVICE

+49 4621 4210-944
service-int@fitshop.de
You can find the opening hours on our homepage: https://stg.fit/statita

PL

DZIAŁ TECHNICZNY I SERWIS

22 307 43 21
+49 4621 42 10-948
info@fitshop.pl
Godziny otwarcia można znaleźć na stronie głównej: https://stg.fit/statit6

AT

TECHNIK & SERVICE

0800 20 20277 (Freecall)
+49 4621 42 10-0
info@fitshop.at
Öffnungszeiten entnehmen Sie unserer Homepage: https://stg.fit/statitb

CH

TECHNIK & SERVICE

0800 202 027
+49 4621 42 10-0
info@fitshop.ch
Öffnungszeiten entnehmen Sie unserer Homepage: https://stg.fit/statit9

Please find a detailed overview including address and opening hours for all stores of Fitshop UK on the following website:

www.fitshop.co.uk/storelocator

WE LIVE FITNESS

WEBSHOP AND SOCIAL MEDIA

The Fitshop Group is Europe's largest specialist for home fitness equipment with currently 70 stores and one of the world's most renowned online mail order companies for fitness equipment.

Fitshop UK is part of the Fitshop Group. Private customers order via the 25 web shops in the respective national language or have their desired equpiment assembled on site. In addition, the company supplies fitness studios, hotels, sports clubs, companies and physio practices with professional equipment for endurance and strength training.

The Fitshop group offers a wide range of fitness equipment from renowned manufacturers, high-quality in-house developments and comprehensive services, such as a build-up service and sports scientific advice before and after the purchase. The company employs numerous sports scientists, fitness trainers and competitive athletes.

Visit us also on our social media platforms or our blog!

FIT SHOP
https://www.fitshop.co.uk
www.fitshop.co.uk/blog

www.facebook.com/fitshop.co.uk

www.instagram.com/fitshop_uk

www.youtube.com/@fitshop_uk

TAURUS®

ELITE TREADMILL