TAURUS®

Assembly and Operating Instructions

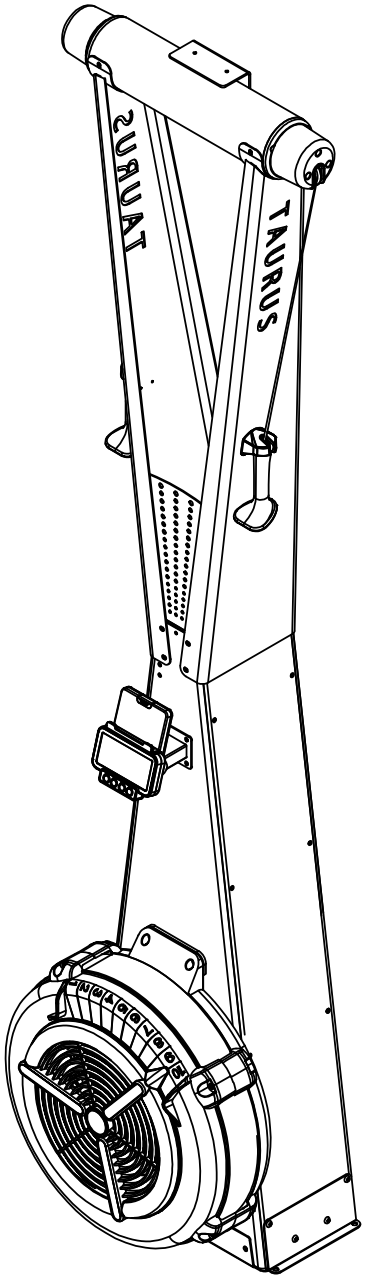

TF-EST

max. 150 kg

~ 80 Min.

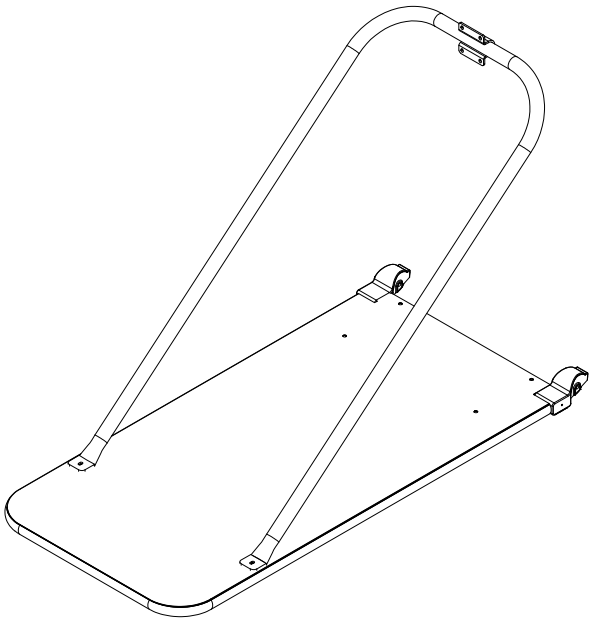

TF-EST-ST

FSUKTFEST.01.03
FSUKTFESTST.01.03

ELITE SKI TRAINER

Content

1	GENERAL INFORMATION	8
1.1	Technical Data	8
1.2	Technical Drawings	9
1.3	Personal Safety	10
1.4	Set-Up Place	11
2	ASSEMBLY	12
2.1	General Instructions	12
2.2	Scope of Delivery	13
2.3	Assembly	15
2.3.1	Assembly With The Stand	15
2.3.2	Wall Assembly	23
2.4	Adjustment	27
2.5	Battery Replacement	27
3	OPERATING INSTRUCTIONS	28
3.1	Console Overview	28
3.2	Display Overview	29
3.3	Resistance	30
3.4	Training Programmes	30
3.4.1	Quick Start	31
3.4.2	Target Programmes	31
3.4.3	Interval Programme	32
4	WORKOUT TIPS	33
4.1	General Instructions	33
4.1.1	Training clothes	33
4.1.2	Warming up and stretching	33
4.1.3	Medication	34
4.1.4	Used muscle groups	34
4.1.5	Exercise frequency	34
4.2	Workout journal	36
4.3	Excercise Recommendations	37
4.4	Wireless Connection and Fitness Apps	39
5	STORAGE AND TRANSPORT	40
5.1	General Instructions	40
5.2	Transportation Wheels	40

6 TROUBLESHOOTING, CARE AND MAINTENANCE 41

6.1 General Instructions 41
6.2 Faults and Fault Diagnosis 42
6.3 Error Codes and Troubleshooting 42
6.4 Maintenance and Inspection Calendar 43

7 DISPOSAL 43

8 RECOMMENDED ACCESSORIES 44

9 ORDERING SPARE PARTS 45

9.1 Serial Number and Model Name 45
9.2 Parts List: TF-EST 46
9.3 Parts List: TF-EST-ST 49
9.4 Exploded Drawings: TF-EST and TF-EST-ST 50

10 WARRANTY 51

11 CONTACT 53

Dear customer,
Thank you for choosing a high-quality equipment of the brand TAURUS®. Taurus offers sports and fitness equipment for the sophisticated home sport and the equipment of fitness studios and business customers. With Taurus fitness equipment, the focus is on what sport is all about: maximum performance! Therefore, the equipment is developed in close consultation with athletes and sports scientists. Because athletes know best what makes perfect fitness equipment.

Further information can be found at www.fitshop.co.uk

Intended Use

The equipment may only be used for its intended purpose.

The equipment is suitable for home use and semi-professional use (e.g. hospitals, clubs, hotels, schools, etc.). The equipment is not suitable for commercial or professional use (e.g. fitness studio).

Legal Notice

Fitshop GmbH
Europe's No. 1 for home fitness

International Headquarters
Flensburger Straße 55
24837 Schleswig
Germany

Management:
Christian Grau
Sebastian Campmann
Dr. Bernhard Schenkel

No. HRB 1000 SL
Local Court Flensburg
European VAT Number: DE813211547

Disclaimer

© TAURUS is a registered brand of the company Fitshop GmbH. All rights reserved. Any use of this trademark without the explicit written permission of Fitshop is prohibited.

Product and manual are subject to change. Technical data can be changed without advance notice.

FITSHOP

Europe's No.1 for Home Fitness

ABOUT THIS MANUAL

Please carefully read the entire manual before installation and first use. The manual will help you to quickly set up the system and explains how to safely use it. Make sure that all persons exercising with the equipment (especially children and persons with physical, sensory, mental or motor disabilities) are informed about this manual and its contents in advance. In case of doubt, responsible persons must supervise the use of the equipment.

Due to ongoing changes and software optimisations, the manual may have to be updated. If you notice any discrepancies during assembly or use, please refer to the manual uploaded to the webshop. The latest manual is always available there.

This equipment has been manufactured according to the latest safety knowledge. As far as possible, potential safety hazards which could cause injury have been eliminated. Make sure to carefully follow the instructions and that all parts are securely in place. If required, read through the instructions again to correct any mistakes.

Training devices must be classified according to accuracy and use. Accuracy classes are only applicable to devices that display training data.

Accuracy classes

Class A: high accuracy.
Class B: medium accuracy.
Class C: low accuracy.

The use classes explain the intended use of the training device.

Use classes

Class S (studio): professional and/or commercial use.
These training devices are intended for the use in training rooms of facilities such as sports clubs, school facilities, hotels, clubs and studios whose access and supervision is specifically regulated by the owner (person with legal responsibility).

Class H (home use): use at home.
These stationary training devices are intended for the use in private homes where access to the training device is regulated by the owner (person with legal responsibility).

Please pay close attention to the safety and maintenance instructions given here. The contract partner cannot be held liable for damage to health, accidents or damage to the equipment when it is not used in accordance with these instructions.

The following safety instructions may appear in this manual:

► **ATTENTION**
This notice indicates potentially hazardous situations which, if not avoided, may result in property damage.

⚠ **CAUTION**
This notice indicates potentially hazardous situations which, if not avoided, may result in slight or minor injuries!

⚠ **WARNING**
This notice indicates potentially hazardous situations which, if not avoided, may result in death or serious injuries!

⚠ **DANGER**
This notice indicates potentially hazardous situations which, if not avoided, will result in death or serious injuries!

ⓘ **NOTICE**
This notice indicates further useful information.

Retain these instructions in a safe place for future reference, maintenance or when ordering replacement parts.

1.1 Technical Data

TF-EST

Weight and dimensions	
Item weight (gross, including packaging)	49.6 kg
Item weight (net, excluding packaging)	41.5 kg
Packaging dimensions of boxes (L x W x H)	122 cm x 47.5 cm x 52 cm
Dimensions (L x W x H)	40.4 cm x 52.9 cm x 214.3 cm
Maximum load	
Maximum user weight	150 kg
Technical specifications	
Resistance system	Air and Magnet resistance
Resistance levels	10
Power supply	4 batteries (1.5 V) (not in scope of delivery)
Console data	
Display	Distance
	Time
	Calories
	Strokes per Minute (SPM)
	Strokes
	Watt
	Pulse
Display size	4,6 Inch
Display type	LCD
Programme overview	
User-defined programmes	1
Target programmes	4
Other data	
Menu language	English
Wireless connection	Yes
Pulse measurement	Optional: chest strap
Use class	S

TF-EST-ST

Weight and dimensions	
Item weight (gross, including packaging)	17,4 kg
Item weight (net, excluding packaging)	15.2 kg
Packaging dimensions of boxes (L x W x H)	133 cm x 65 cm x 10 cm
Dimensions (L x W x H)	126.8 cm x 60.7 cm

1.2 Technical Drawings

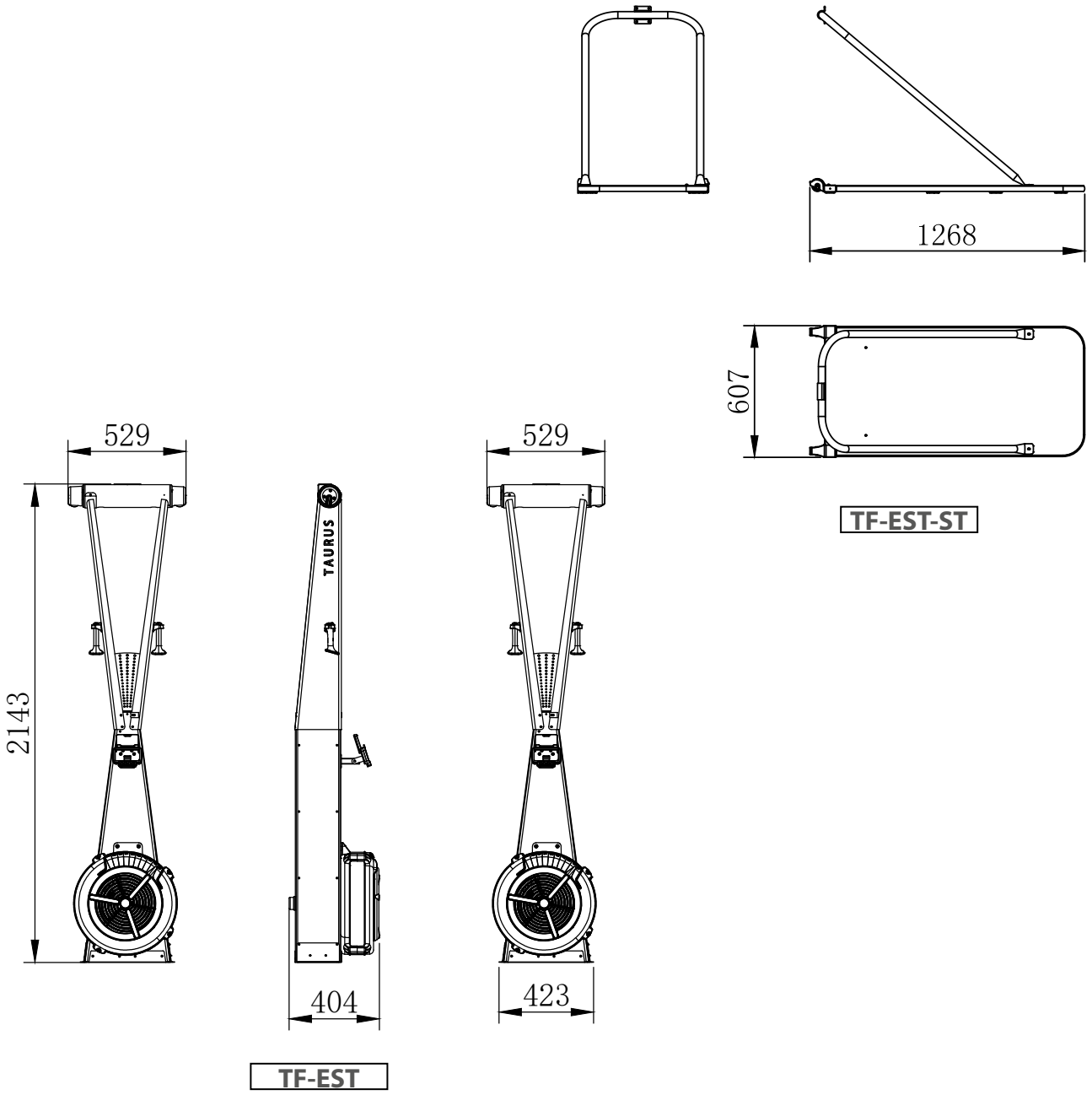

1.3 Personal Safety

⚠ **DANGER**

+ Before you start using the equipment, you should consult your physician that this type of exercise is suitable for you from a health perspective. Particularly affected are persons who: have a hereditary disposition to high blood pressure or heart disease, are over the age of 45, smoke, have high cholesterol values, are overweight and/or have not exercised regularly in the past year. If you are under medical treatment that affects your heart rate, medical advice is absolutely essential.
+ Note that excessive training can seriously endanger your health. Please also note that heart rate monitoring systems can be inaccurate. If you notice any signs of weakness, nausea, dizziness, pain, shortness of breath, or other abnormal symptoms, stop exercising immediately and seek advice from your doctor if necessary.
+ The owner must communicate all warnings and instructions to the user.

⚠ **WARNING**

+ This equipment may not be used by children under the age of 14.
+ Children should not be allowed unsupervised access to the equipment.
+ Persons with disabilities must have a medical license and must be under strict observation when using the equipment.
+ The equipment is strictly for use by one person at a time.
+ If your equipment provides a safety key, the clip of the safety key must be attached to your clothing before starting your training. In the event of a fall, the EMERGENCY STOP of the equipment can be initiated.
+ Keep your hands, feet and other body parts, hair, clothing, jewellery and other objects well clear of moving parts.
+ During use, wear suitable sports clothing rather than loose or baggy clothing. When wearing sports shoes, make sure they have suitable soles, preferably made of rubber or other non-slip materials. Shoes with heels, leather soles, studs or spikes are unsuitable. Never exercise barefoot.
+ The appliance must be set up on a stable and level surface.

⚠ **CAUTION**

+ If your equipment needs to be connected to the power supply with a mains cable, make sure that the cable is not a potential tripping hazard.
+ Make sure that nobody is within the range of motion of the equipment during training so as not to endanger you or other persons.
+ Be aware that if adjustment devices are left protruding, they may impede the user's movement.

► **ATTENTION**

+ Do not insert any objects of any kind into the openings of the device.
+ The safety level of the equipment can only be maintained if it is regularly checked for damage and wear.
+ To protect the equipment from use by unauthorised third parties, always remove the power cable (if existing) when not in use and store it in a safe place that is inaccessible to unauthorised persons (e.g. children).

1.4 Set-Up Place

⚠ **WARNING**

+ Do not place the equipment in main corridors or escape routes.

⚠ **CAUTION**

+ Choose a location in which to place the equipment such that there is enough free space/ clearance to the front, the rear and to the sides of the equipment. Make sure that you leave at least 30 cm on each side of the equipment and at least 15 cm in front of and behind the equipment as a training zone. This is the minimum required area in order to safely use the equipment. The recommended free zone around the equipment should be at least 60 cm on each side and 45 cm in front of and behind the equipment.
+ The training room should be well ventilated during training and not be exposed to any draughts.
+ Choose the place in which to set up the equipment such that there is enough free space/ clearance to the front, the rear and to the sides of the equipment.
+ The set-up and mounting surface of the equipment should be flat, loadable and solid.

► **ATTENTION**

+ The device may only be used in one building, in sufficiently tempered and dry rooms (ambient temperatures between 10°C and 35°C). The equipment should not be used outdoors or in rooms with high humidity (over 70%) like swimming pools.
+ A floor protective mat/equipment underlay can help to protect high-quality floor coverings (parquet, laminate, cork, carpets) from dents and sweat and can help to level out slight unevenness.
+ For Class S equipment, the exercise equipment may only be used in areas where access, supervision and control are specifically regulated by the owner.

2.1 General Instructions

⚠ **DANGER**

+ Do not leave any tools, packaging materials such as foils or small parts lying around, as otherwise there is a danger of suffocation for children. Keep children away from the equipment during assembly.

⚠ **WARNING**

+ Pay attention to the instructions attached to the equipment in order to reduce the risk of injuries.

⚠ **CAUTION**

+ Ensure to have sufficient room for movement in each direction during assembly.
+ The assembly of the equipment must be carried out by at least two adults. If in doubt, seek the help of a third technically skilled person.

► **ATTENTION**

+ To prevent damage to the equipment and the floor, assemble the equipment on a mat or packaging board.

ⓘ **NOTICE**

+ In order to make the assembly as simple as possible, some screws and nuts to be used can already be pre-assembled.
+ Ideally, assemble the equipment at its later set-up place.

2.2 Scope of Delivery

The scope of delivery consist of the following parts. At the beginning, check whether all parts and tools belonging to the device are included in the scope of delivery and whether damage has occurred. In the event of complaints, the contractual partner must be contacted directly.

⚠ **CAUTION**
If parts of the scope of delivery are missing or damaged, the assembly must not be carried out.

ⓘ **NOTICE**
Batteries are not included in the scope of delivery. The following batteries are required: 4 x 1.5 V AAA

ⓘ **NOTICE**
+ Required tools: Allen key, spanner, screwdriver
+ To reduce the assembly time, use a cordless screwdriver.

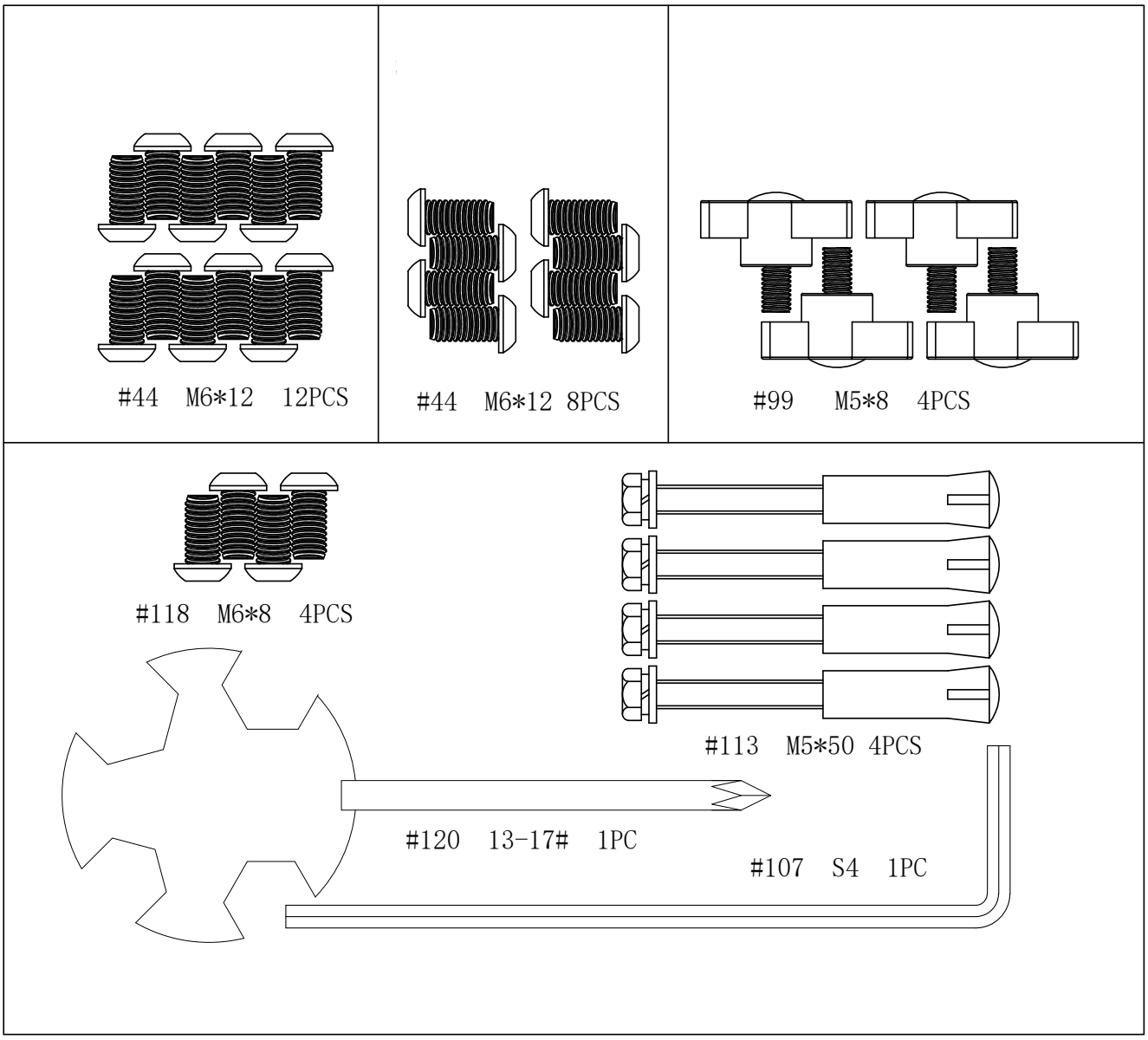

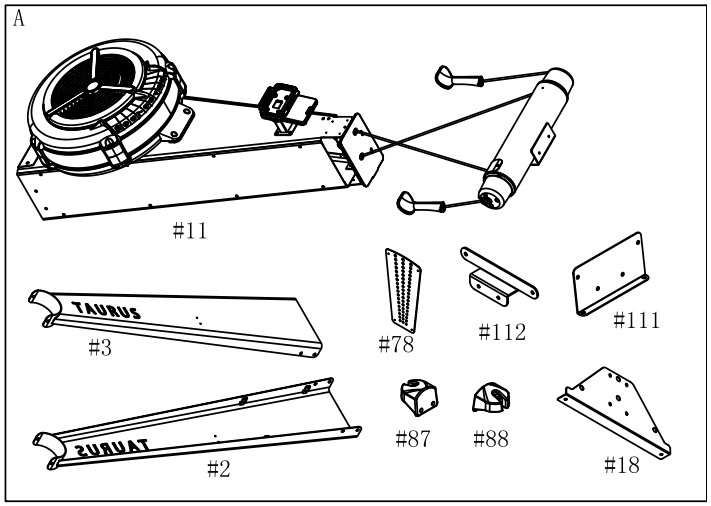

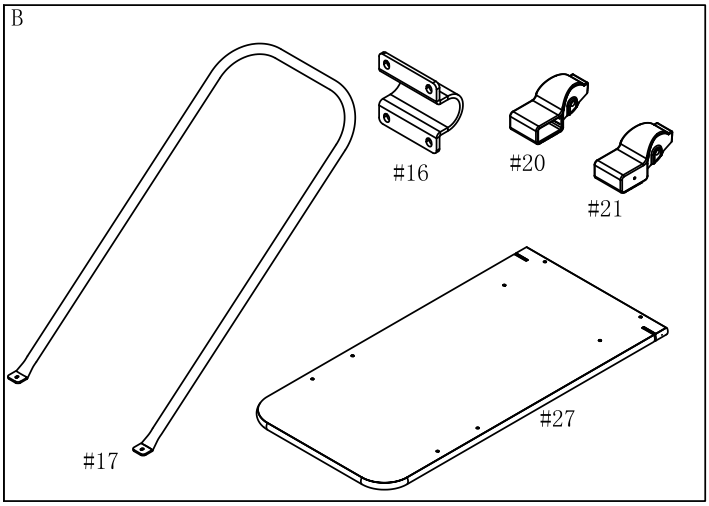

Item No.	Part Name	Qty
11	Main Frame Assembly	1
2	Left Vertical Plate	1
3	Right Vertical Plate	1
78	Panel	2
18	Strengthening Plate	1
87	Left Handlebar Seat	1
88	Right Handlebar Seat	1
111	Base Connection Plate	2
112	Fixed Bracket	1
16	Connecting Pipe Fixing Plate	1
17	Connecting Pipe	1
27	Bottom Board	1
20	Front End Cap (L)	1
21	Front End Cap (R)	1

2.3 Assembly

Before assembly, take a close look at the individual assembly steps shown and carry out the assembly in the order given.

ⓘ **NOTICE**

+ First loosely screw all parts together and check that they fit properly. Tighten the screws using the tool only when you are instructed to do so.
+ Do not tighten the screws and bolts with excessive force as they could be damaged.
+ If you have difficulty recognising the graphics, we recommend that you open and/or download the PDF instructions stored in the webshop on your end device (e.g. smartphone, tablet or PC). There you have the option of zooming in closer. Please note that the Adobe Acrobat Reader programme must be installed on your end device in order to open the file.

2.3.1 Assembly With The Stand

ⓘ **NOTICE**

For an easier assembly, use a step ladder.

Step 1: Assembly of the vertical plates

Tools: Allen key

1. Position the main frame (11) in a vertical position.
2. Remove the four bolts (44) and two fixed seat guard plates (116) from the fixed seat (10) (Fig. 1).
3. Fix the left vertical plate (2) to the main frame (11) with four bolts (44) (Fig. 3).
4. Fix the right vertical plate (3) to the main frame (11) with four bolts (Fig. 2).

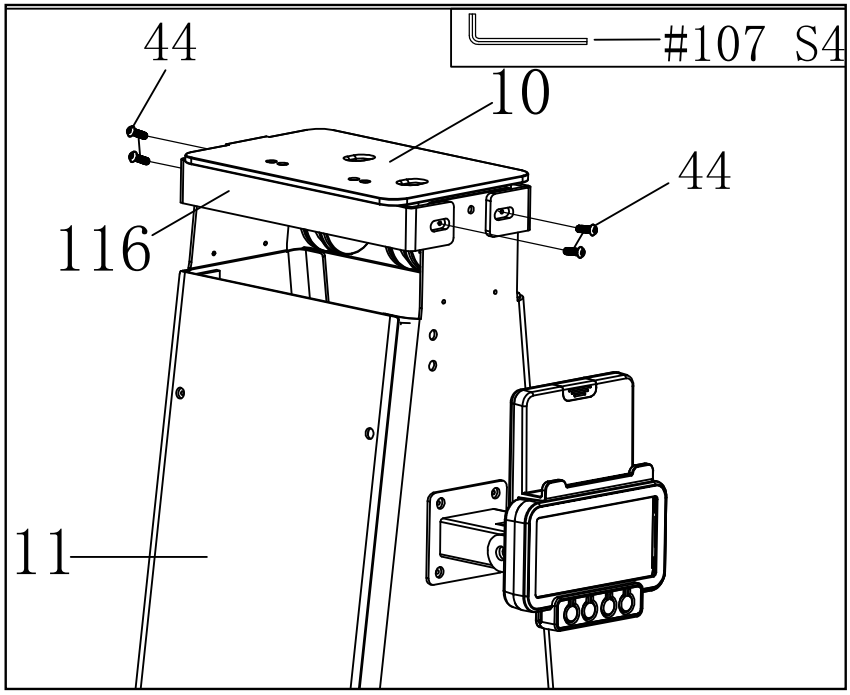
#107 S4
44
10
44
116
11

Fig. 1

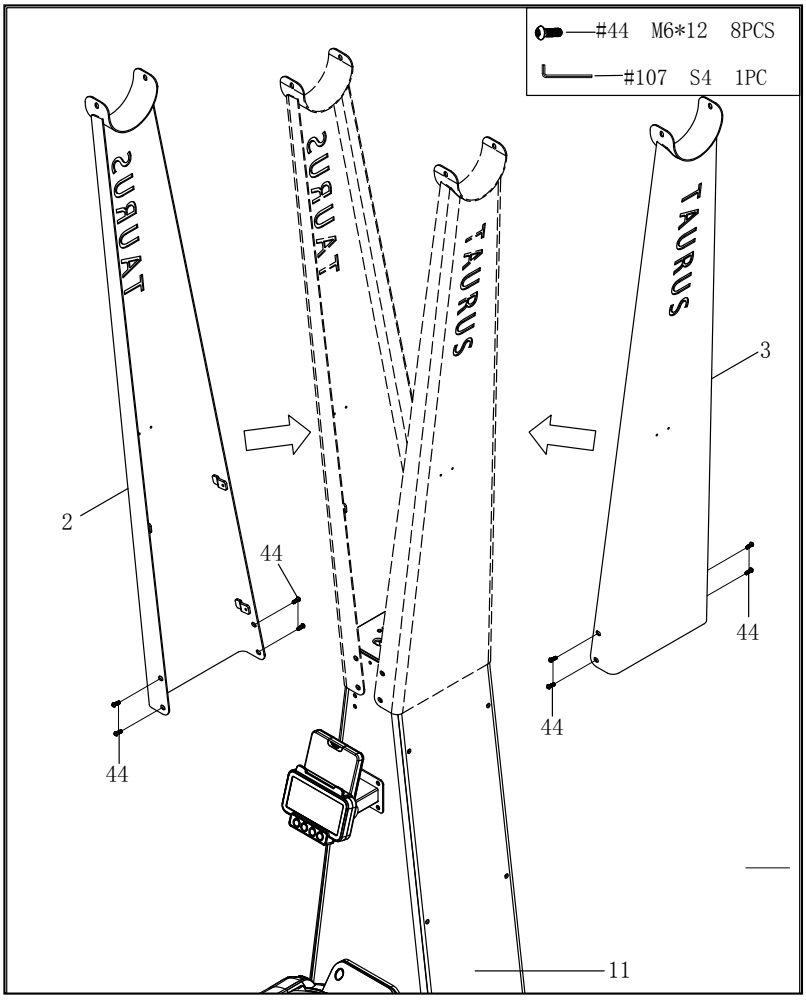
#44 M6*12 8PCS
#107 S4 1PC
TAURUS
TAURUS
TAURUS
TAURUS
3
2
44
44
44
44
11

Fig. 2

Step 2: Assembly of the pipe

Tools: Allen key

1. Place styrofoam on the ground and lay the main frame (11) on the styrofoam.
2. Fix the round straight pipe (1) to the left (2) and right (3) vertical plates with four bolts (44).
3. Tighten all bolts.
4. Position the main frame (11) in a vertical position.

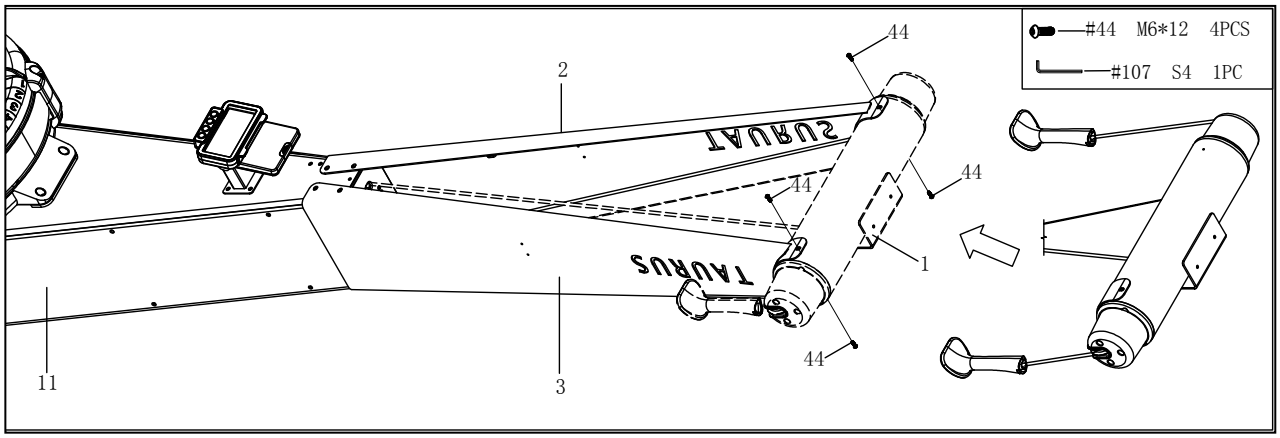

Fig. 3

Step 3: Assembly of the front end caps

Tools: Screwdriver

1. Fix the left (20) and right (21) front end caps to the bottom board (27) with two screws (46).

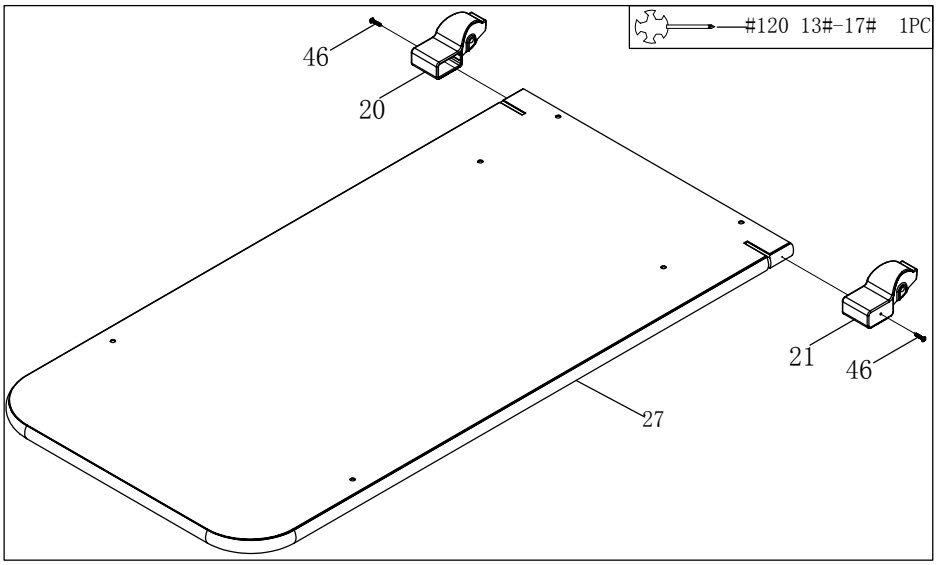

Fig. 4

Step 4: Assembly of the connection plates

Tools: Allen key

1. Remove the four preassembled bolts (44) from the main frame (11) (Fig. 5).
2. Fix the two base connection plates (111) to the main frame (11) with eight bolts (44) (Fig. 6).

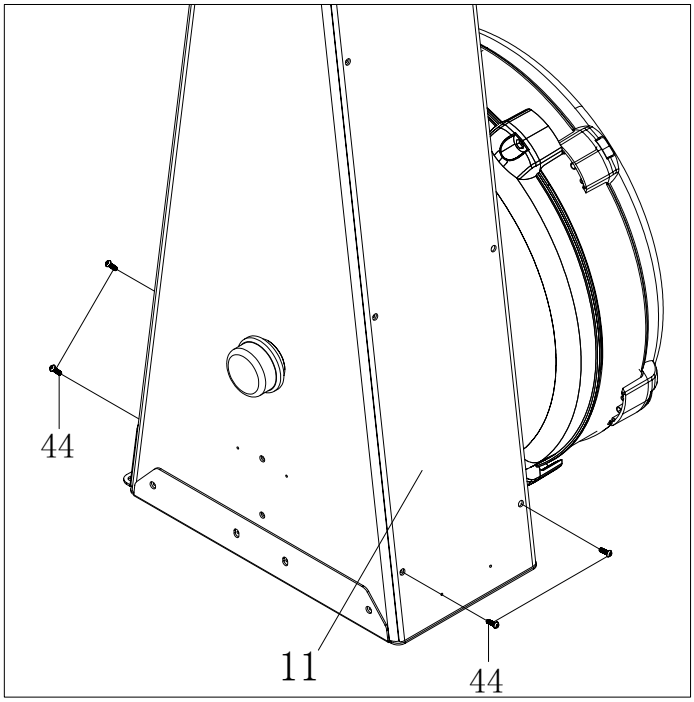

Fig. 5

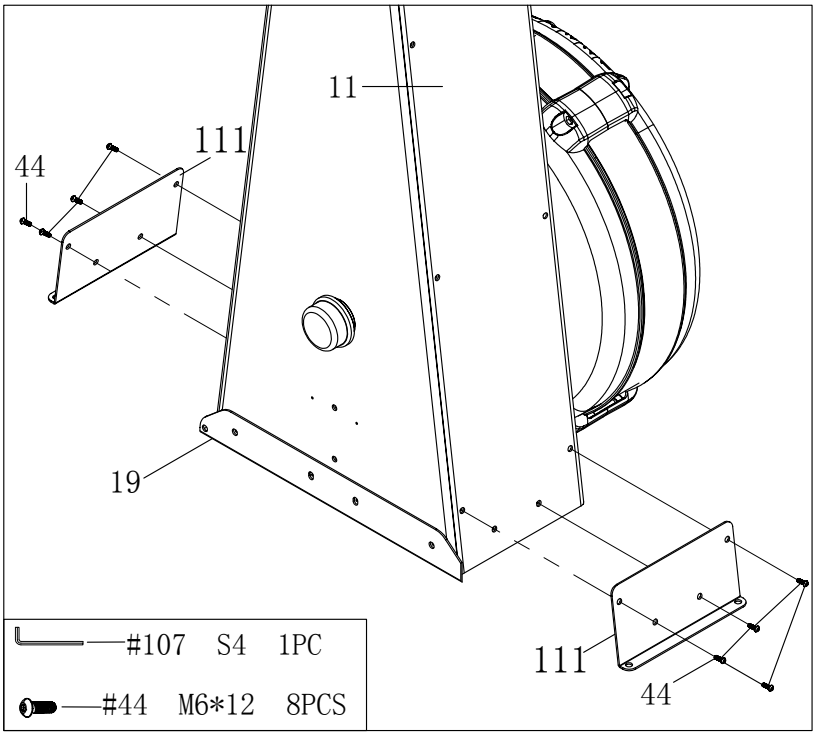

Fig. 6

Step 5: **Assembly of the bottom board**

Tools: Allen key, cordless screwdriver

ⓘ **NOTICE**

+ The lock nuts (36), lock washers (37), and bolts (38) are preassembled.
+ To reduce the assembly time, use a cordless screwdriver.

1. Place styrofoam on the ground and lay the main frame (11) on the styrofoam.

ⓘ **NOTICE**

Make sure to not remove the preassembled lock nuts (36) and lock washers (37) in the next step.

2. Remove the four bolts (38) from the bottom plate (27).
3. Fix the bottom plate (27) and the strengthening plate (18) to the main frame (11) with four bolts (38), four lock washers (37), and four lock nuts (36) (Fig. 7).

ⓘ **NOTICE**

Installing the screws might take a long time without the use of a cordless screwdriver.

4. Fix the strengthening plate (18) to the main frame (11) with four bolts (44) (Fig. 8).
5. Position the main frame (11) in a vertical position.

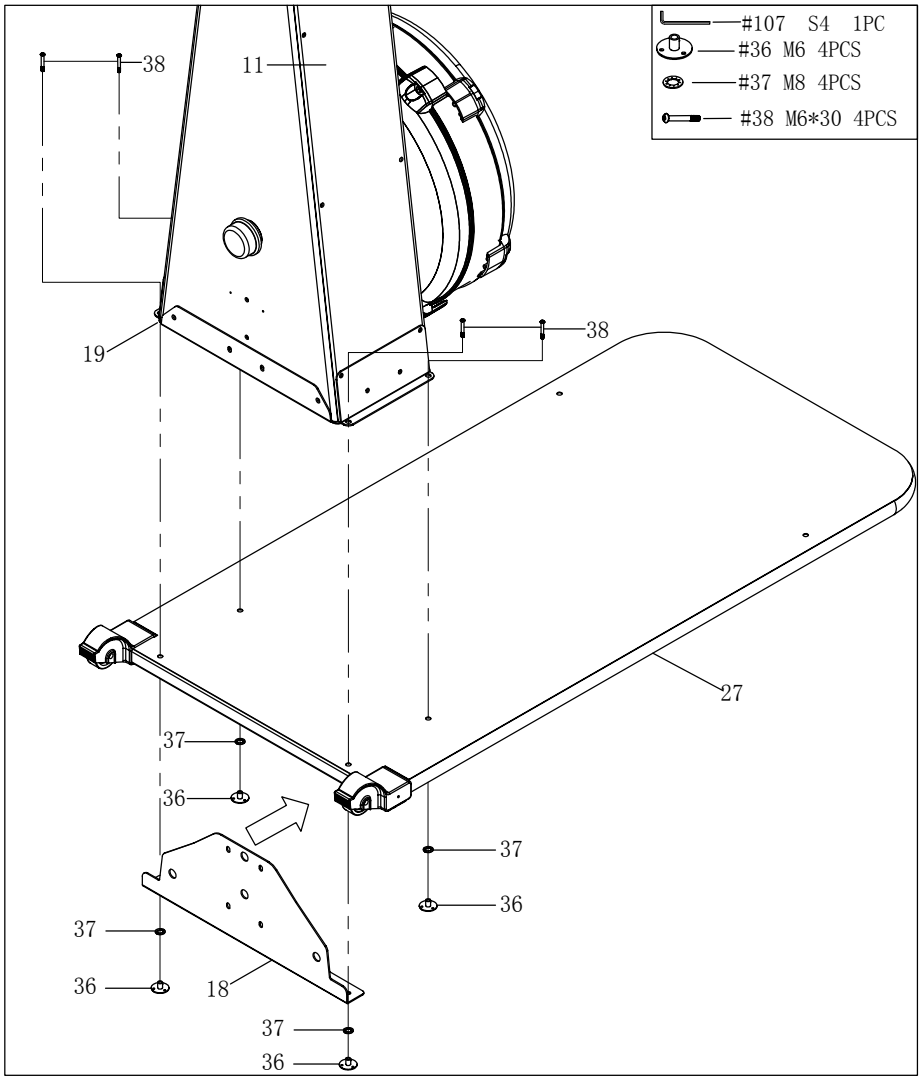

Fig. 7

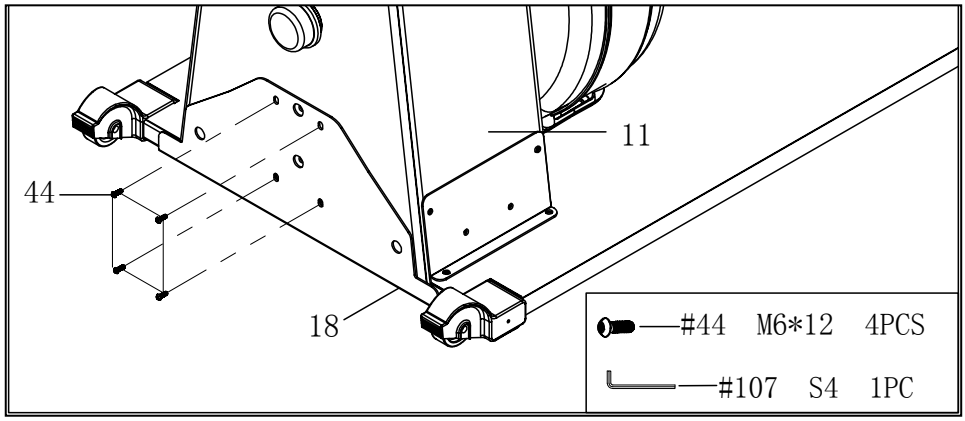

Fig. 8

Step 6: Assembly of the connecting pipe

Tools: Allen key

1. Remove the two bolts (38) and two washers (56) from the bottom board (27).
2. Fix the connecting pipe (17) to the bottom board (27) with two bolts (38) and two washers (56).
3. Fix the connecting pipe fixing plate (16) to the main frame (11) with four bolts (44).

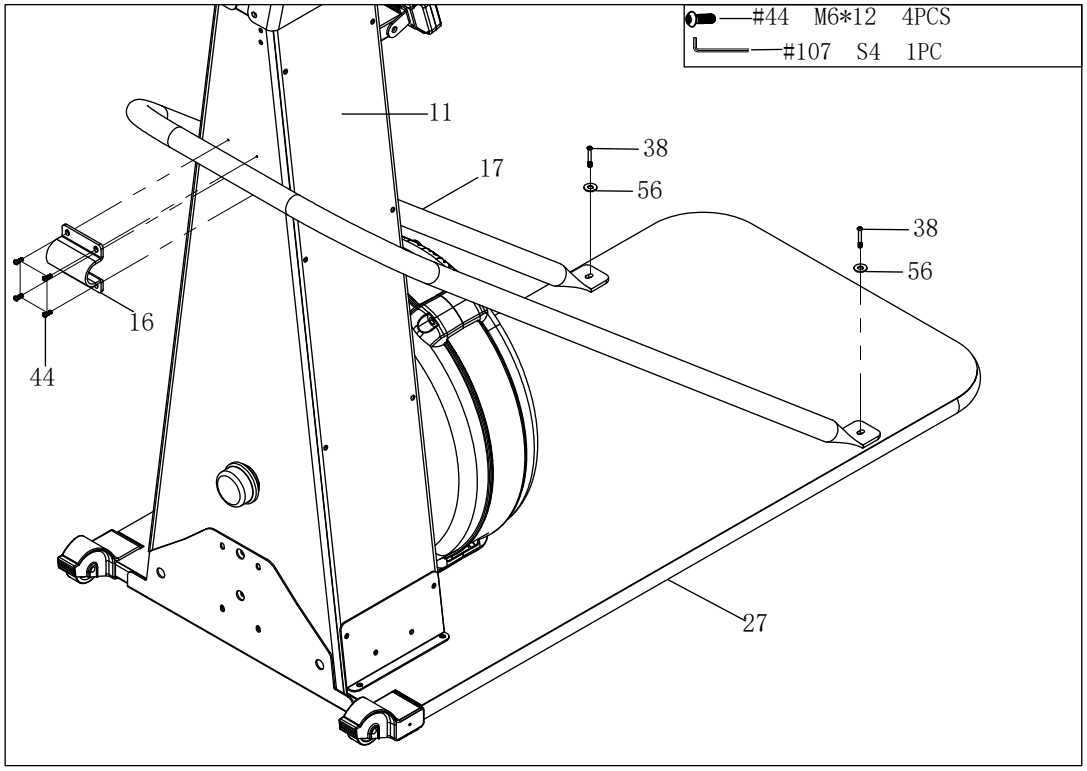

Fig. 9

Step 7: Assembly of the panels

NOTICE

The panels are fixed directly onto the vertical plates. The upper holes on the panels are not used to fix the panels onto the vertical plates.

1. Fix the two panels (78) to the left (2) and right (3) vertical plates with four rubber head knobs (99).

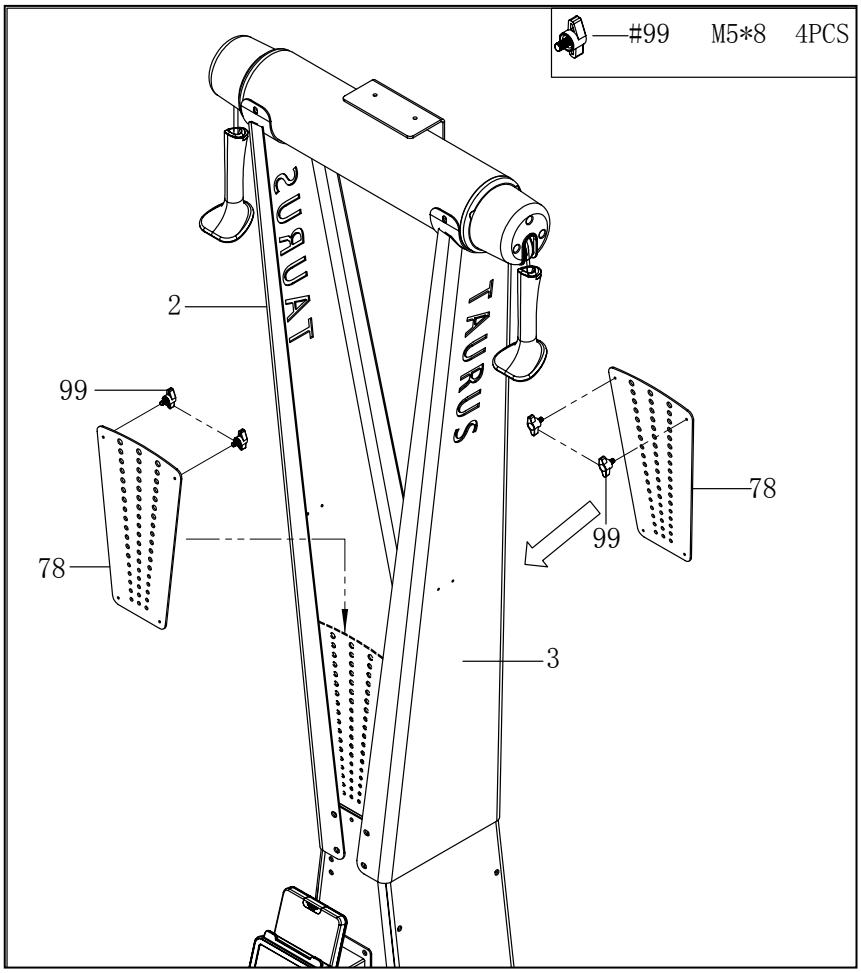

Fig. 10

Step 8: **Assembly of the handlebar seats**

Tools: Allen key

1. Fix the left handlebar seat (87) to the left vertical plate (2) with two bolts (118).
2. Fix the right handlebar seat (88) to the right vertical plate (3) with two bolts (118).
3. Place the two handles (4) in the left (87) and right (88) handlebar seats.

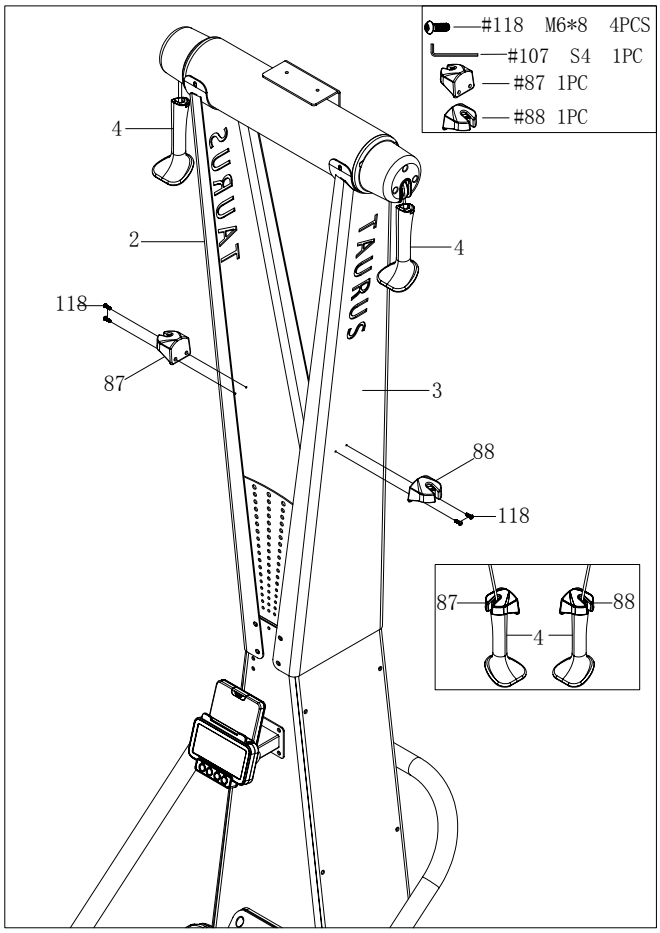

Fig. 11

Completed assembly with the stand

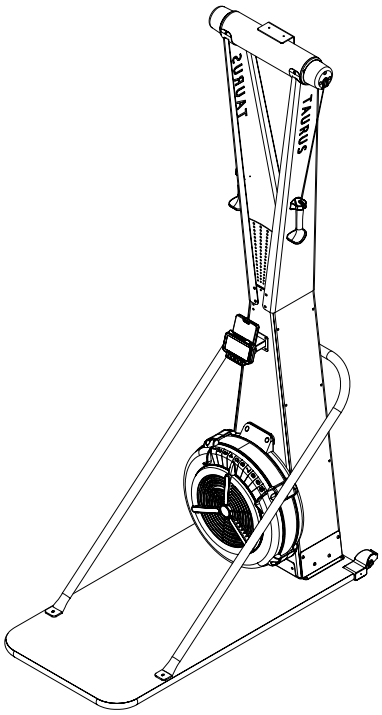

Fig. 12

2.3.2 Wall Assembly

► **ATTENTION**

+ The supplied assembly material for wall mounting is not suitable for every wall. Pay attention to the condition of your wall to determine which assembly material is suitable for your wall.
+ The contractual partner accepts no liability for any damage to the wall.
+ Make sure that there are no cables or wires running in the wall where you attach the training equipment.

Step 1: Removal of the connecting pipe fixing plate, connecting pipe, strengthening plate, and bottom board

Tools: Allen key

1. Remove the connecting pipe fixing plate (16) and the four bolts (44) from the main frame (11) (Fig. 13).
2. Remove the connecting pipe (17), two bolts (38) and two washers (56) from the bottom board (27) (Fig. 13).
3. Remove the strengthening plate (18) and the four bolts (44) from the main frame (11) (Fig. 14).
4. Remove the strengthening plate (18), bottom board (27), four bolts (38), four lock washers (37), and four lock nuts (36) from the main frame (11) (Fig. 15).

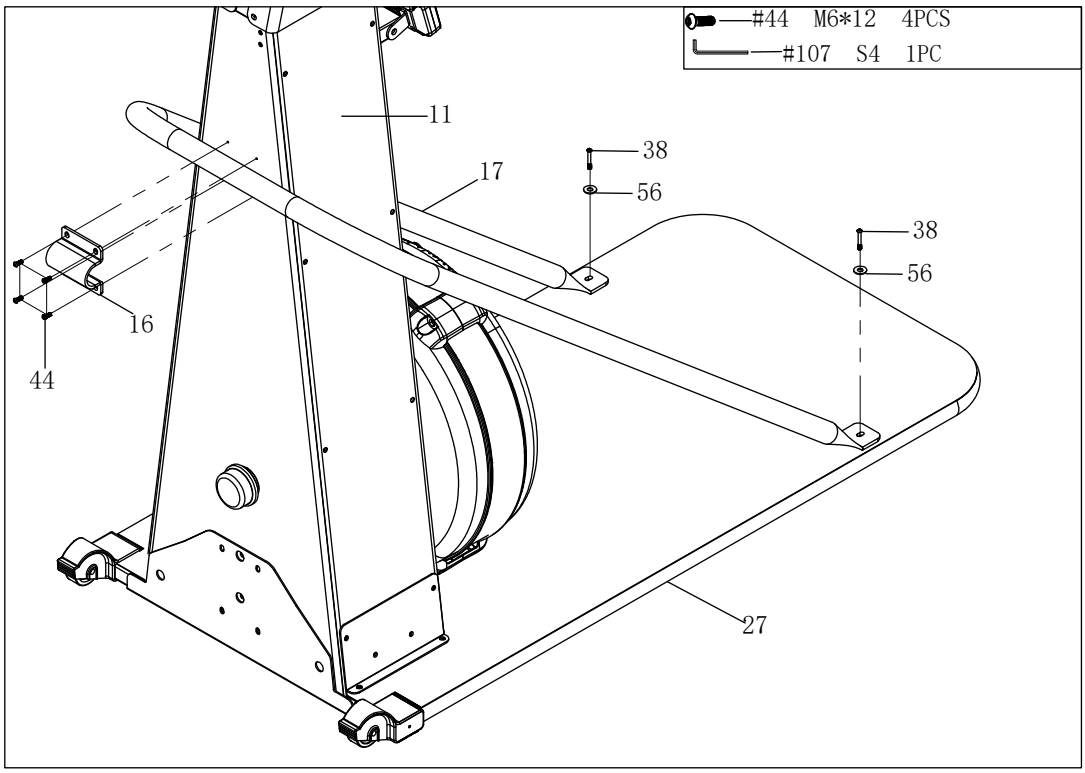

Fig. 13

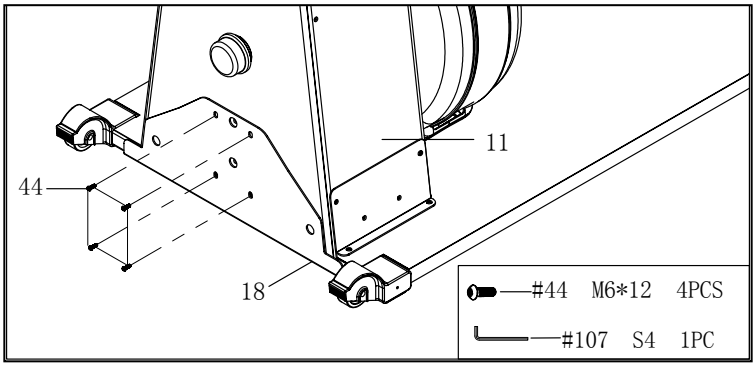
11
44
18
#44 M6*12 4PCS
#107 S4 1PC

Fig. 14

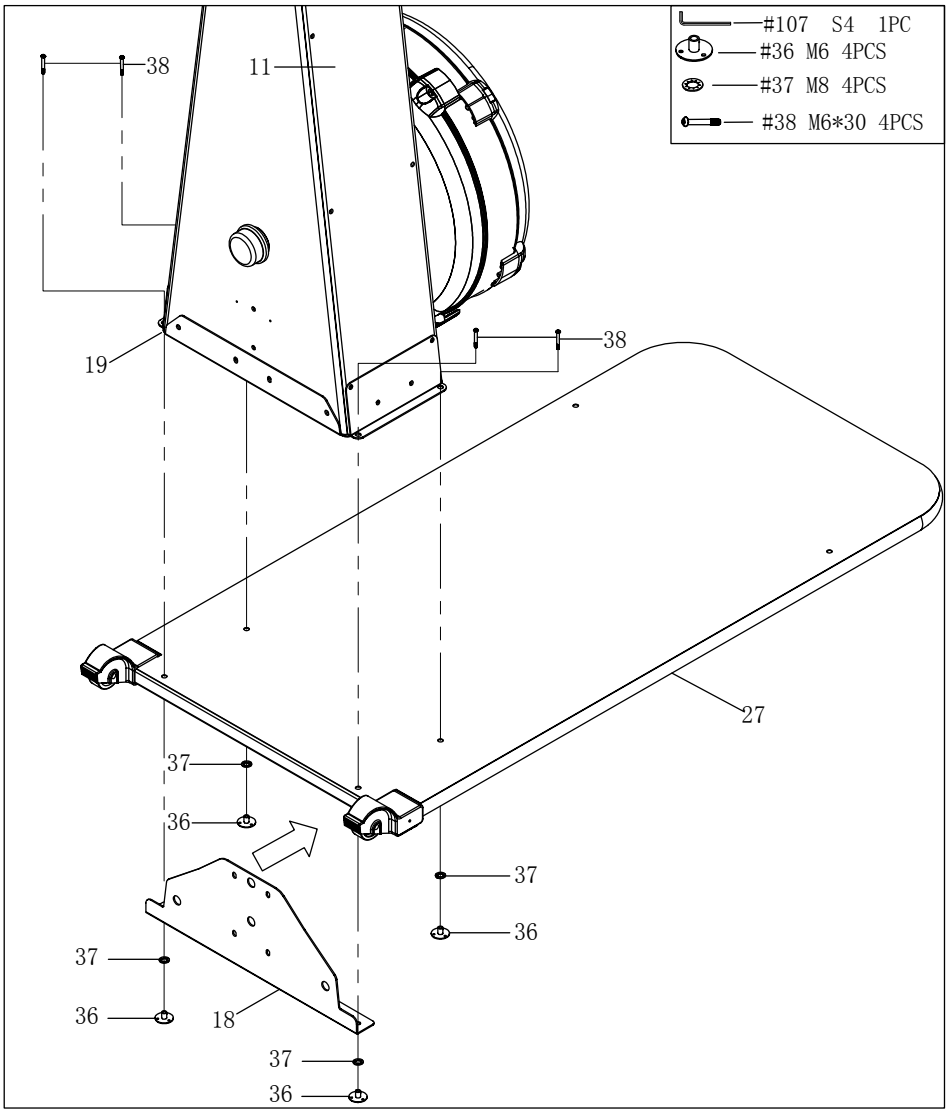
#107 S4 1PC
#36 M6 4PCS
#37 M8 4PCS
#38 M6*30 4PCS
38
11
19
38
27
37
36
37
36
37
36
18
37
36

Fig. 15

Step 2: Assembly of the strengthening plate and fixed bracket

Tools: Allen key

1. Fix the strengthening plate (18) to the round straight pipe (1) with two bolts (44) (Fig. 16).
2. Fix the fixed bracket (112) to the back connecting plate (80) with two bolts (44) (Fig. 17).

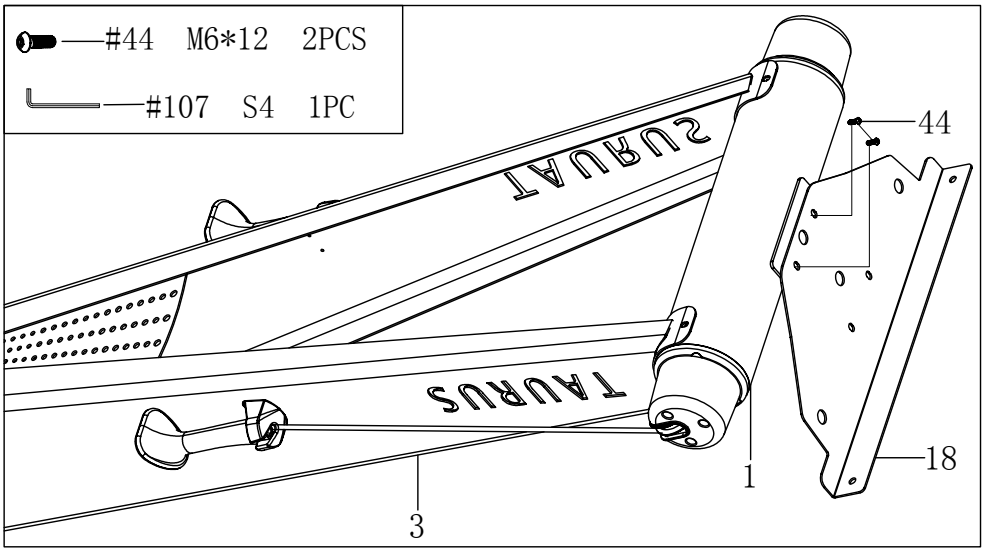

Fig. 16

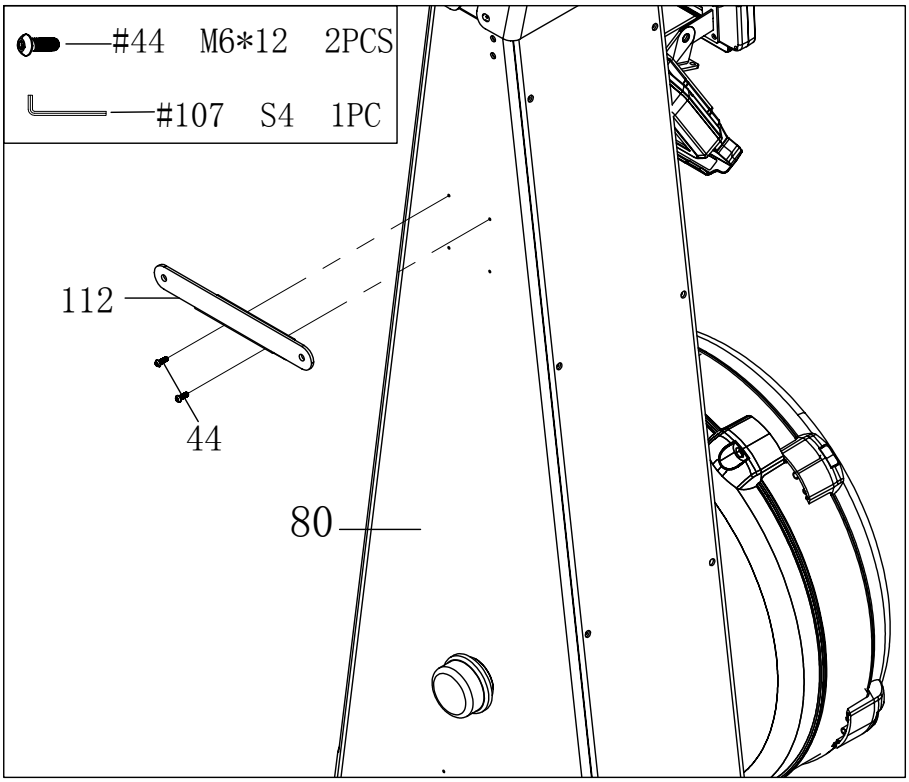

Fig. 17

Step 3: Wall assembly

1. Fix the device to the wall with the strengthening plate (18), two expansion screws (113) and a fixed bracket (112).

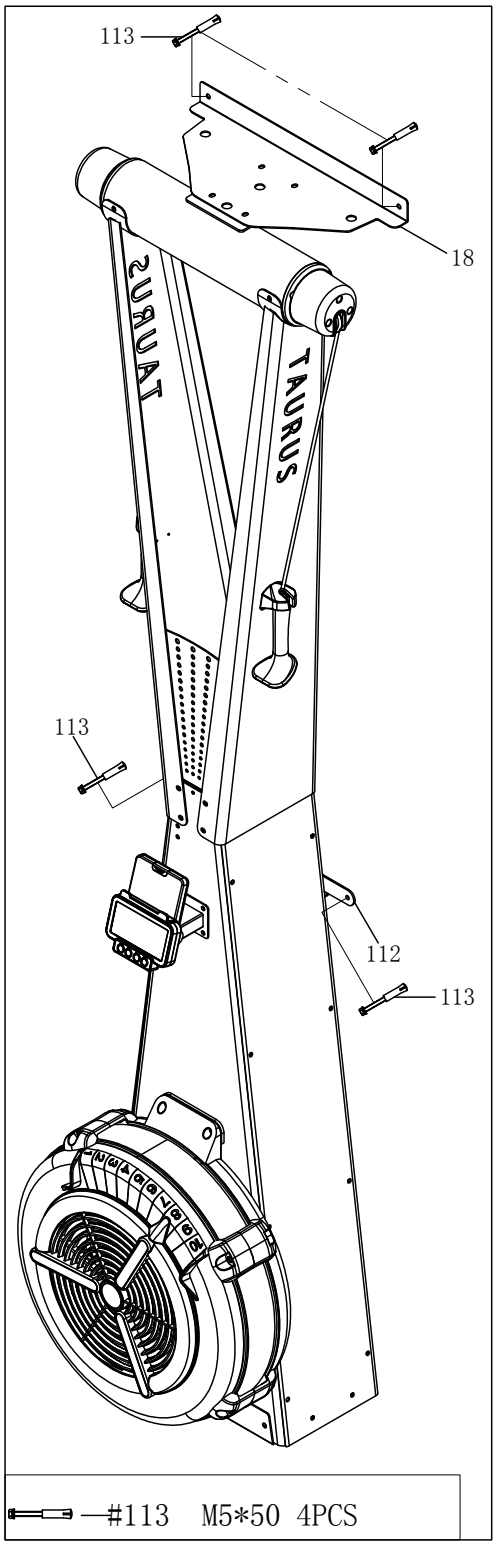

Fig. 18

Step 4: Removal of the auxiliary tube

1. Remove the packaging auxiliary tube (106) from the damper.

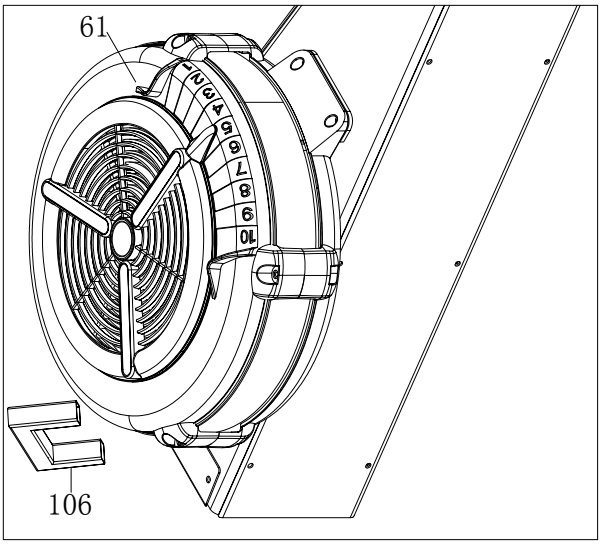

Fig. 19

2.4 Adjustment

ⓘ **NOTICE**

+ The resistance is adjusted between positions 1 (low) and 10 (high) using the damper selector located on the side of the fan adjustment cover (62). This changes the air supply to the fan. We recommend setting the damper to 3 at the beginning.
+ Higher level = higher resistance
+ Lower level = lower resistance

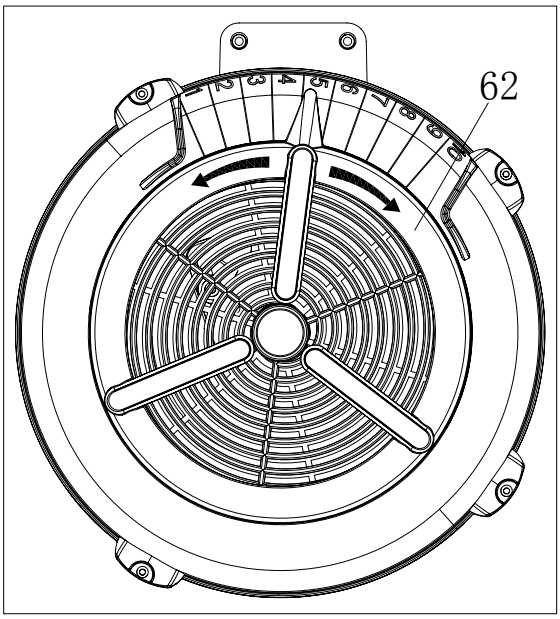

Fig. 20

2.5 Battery Replacement

ⓘ **NOTICE**

The following batteries are required: 4 x 1.5 V AAA

1. Open the battery compartment.
2. Remove the batteries.
3. Insert the new batteries.
4. Close the battery compartment.

ⓘ **NOTICE**

+ Familiarise yourself with all the functions and setting options of the device before starting training. Have the proper use of this product explained to you by a specialist.
+ Always start your training with low intensity and increase evenly and gently. End your training with a cool-down phase. If you are unsure, please consult your physician.

3.1 Console Overview

BUTTON	NAME	FUNCTION
RESET	**RESET**	+ To reset the training values, press this button. + To reset the console, press this button for two seconds.
MODE	**MODE**	+ To confirm the training parameter, press this button. + To switch among the training parameters, press this button. + To access the training programmes, press this button.
^	**ARROW UP**	To raise the traning values, press this button.

	ARROW DOWN	To lower the training values, press this button.

3.2 Display Overview

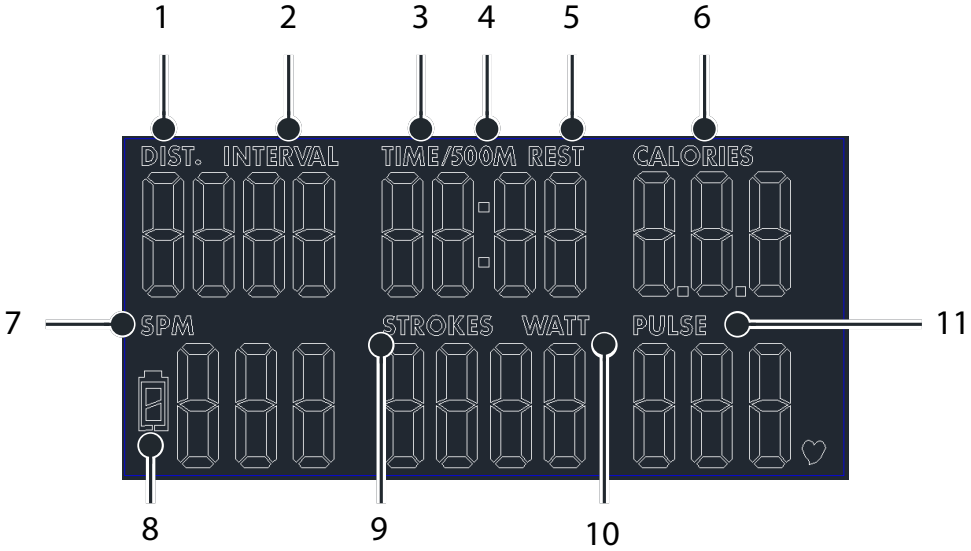

NO.	DISPLAY	NAME	FUNCTION
1	DIST.	Distance	+ Displays the training distance. + Setting range: 0 – 9900 (in 100 increments) + Display range: 0 – 9999 + Value counts down in target programme.
2	INTERVAL	Interval programme	Displays the active interval programme.
3	TIME	Time	+ Displays the training time. + Setting range: 01:00 – 99:00 (in 1 increments) + Display range: 0:00 – 99:59 + Value counts down in target programme. + Displays in the interval programme the training period in seconds.
4	TIME/500M	Time per 500m	Displays needed time for 500m distance.
5	REST	Rest during interval training	Displays in the interval programme the rest period in seconds.
6	CALORIES	Calories	+ Displays the burned calories. + Setting range: 20 – 980 (in 20 increments) + Display range: 0.0 – 999 + Value counts down in target programme.
7	SPM	Strokes per minute	Displays the strokes per minute.

8	BATTERY	Battery	+ Displays the battery status. + Starts to flash once the battery status is too low.
9	STROKES	All strokes	+ Displays all strokes. + Setting range: 25 – 9975 (in 25 increments) + Display range: 0 – 9999 + Value counts down in target programme.
10	WATT	Watt	Displays the current power in watts.
11 b	PULSE	Pulse	+ Displays your heart rate when the contacts or a chest strap are used (Chest strap not included). + Displays the quantity of the training rounds in the interval programme.
	b	Wireless connection	Displays the wireless connection.

3.3 Resistance

LEVEL appears on the display (L1-L10). If a mismatch in the LEVEL value is detected, a VR calibration can be performed.

1. To start the calibration, press both arrow buttons simultaneously for three seconds.

L TIME appears in the display window DIST.

2. On fan adjustment cover, set the resistance to 1.
3. To confirm the value, press MODE.

H TIME appears in the display window DIST.

4. On fan adjustment cover, set the resistance to 10.
5. To confirm the value, press MODE.

→ ***The calibration is complete.***

3.4 Training Programmes

Your device offers a selection of training programmes to ensure you reach your workout goals. The following training programmes are available:

PROGRAMME	DESCRIPTION	QTY.
QUICK START	Training without preset values.	1
TARGET PROGRAMMES	Set one or more parameters for your training session. The set parameters are counted down.	4
INTERVAL PROGRAMME	Set your individual training session consisting of training rounds, training and rest phases.	1

ⓘ **NOTICE**
The training values can only be set prior to the training.

In the following chapters you will find a detailed description of the training programmes.

3.4.1 Quick Start

To start a training session without preset values, choose the quick start programme.

How to start quick start:

1. Pull on the handles.

The training values are counting up.

→ ***The quick start has started.***

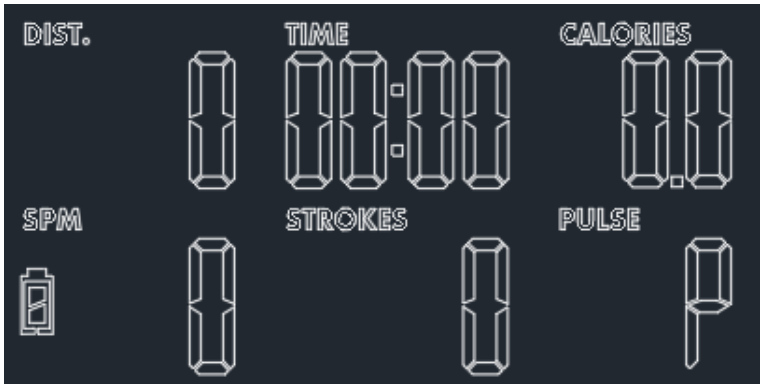

3.4.2 Target Programmes

To start a training session with target programmes, choose one of the four target programmes. You can set multiple target programmes.

How to start the target programmes:

1. Press MODE.

DIST. flashes.

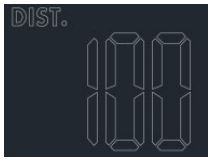

2. To set your training distance, use the arrow buttons.
3. To confirm the value, press MODE.

ⓘ **NOTICE**

+ If within 30 seconds the MODE button is pressed or movement is detected by the device, the target programme starts up.

TIME flashes.

4. To set your training time, use the arrow buttons.
5. To confirm the value, press MODE.

CALORIES flashes.

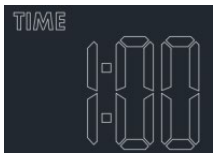

6. To set your calorie target, use the arrow buttons.
7. To confirm the value, press MODE.

STROKES flashes.

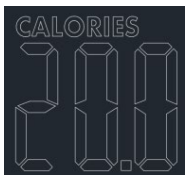

8. To set your stroke target, use the arrow button.
9. To confirm the value, press MODE.

The programme starts and the target values are counting down.

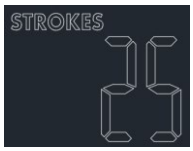

10. Once a target programme is completed, a sound emits.

The completed training parameter counts up while the remaining target

parameters count down.

→ ***The training session is over once all set up target are counted down.***

3.4.3 Interval Programme

To start an interval training session, you can choose the interval programme. The interval programme consists of the number of training rounds, the active training phase, and the rest phase displayed in seconds.

+ Setting range training rounds: 1 – 99 (in 1 increments)
+ Setting range training phase and rest phase: 10 – 120 seconds (in 10 increments)

How to start the interval programme:

1. Press MODE for three seconds.

A sound emits and INTERVAL flashes.

TIME flashes.

2. To set your training time, use the arrow buttons.
3. To confirm the value, press MODE.

REST flashes.

4. To set your rest phase, use the arrow buttons.
5. To confirm the value, press MODE.

PULSE flashes.

6. To set your training rounds, use the arrow buttons.
7. To confirm the value, press MODE.

The interval programme starts.

Here you find a description of the displayed values.

VALUE	DESCRIPTION
TIME	Displays the active training phase. During the last three seconds a sound emits.
REST	Displays the active training phase and rest phase in seconds. During the last three seconds a sound emits.
PULSE	Displays the number of training rounds.

4.1 General Instructions

When training, it is important to perform the exercises correctly in order to avoid injuries and achieve the desired training effect. Make sure you use the correct technique and train at an appropriate intensity level. Always consult an expert such as a trainer or doctor if you are unsure or have health problems. Always start your training with a low load and increase it evenly and gently.
End your training with a cool-down phase. If you have any questions or uncertainties, contact your doctor.

4.1.1 Training clothes

During training, wear appropriate sports clothing that is comfortable and breathable. Avoid clothing that restricts you or is uncomfortable. Make sure that your shoes are suitable and offer you sufficient support. In addition, always carry a towel with you to wipe away sweat and keep the equipment clean.

4.1.2 Warming up and stretching

It is important to warm up and stretch properly before training to avoid injury and improve performance. Stretching helps to loosen muscles and improve flexibility. Be sure to incorporate a short stretching routine before each workout.

Warm-up exercise:

1. Stand upright with your feet about shoulder-width apart.
2. Start with gentle arm circles by slowly moving your arms forwards in small circles in a controlled manner.
3. Perform arm circles backwards to loosen your shoulders and arms.
4. Do squats by slowly squatting down and then straightening up again. Make sure that your knees do not extend beyond your toes.

⚠ **CAUTION**
Do not exercise with sore muscles or take it easy on the affected muscles, as this can lead to injuries.

4.1.3 Medication

If you regularly take medication and want to exercise, it is important to be aware of possible side effects. Ask your doctor whether your medication affects your workout.

4.1.4 Used muscle groups

The training uses the following muscle groups:

+ Back muscles
+ Shoulder muscles
+ Arm muscles
+ Abdominal muscles
+ Leg muscles

Make sure you keep your back straight during training. Do not hunch over and do not arch your back. Do not fully extend your legs, but keep a slight bend in the backwards movement.

4.1.5 Exercise frequency

Regular exercise is crucial to making progress and staying healthy in the long term. Continuous exercise can strengthen muscles, improve endurance and enhance overall well-being. Remember that even small workouts can be done regularly to achieve long-term results.

Training with heart rate orientation
Heart rate orientation guarantees an extremely effective and healthy training. Through your age and the following table, you can quickly and easily read and determine the optimal pulse for your training. An acoustic alarm will sound if your heart rate exceeds the set target heart rate. Which target heart rate is important for which training goal can be found out in the following.

Fat burning (weight management): The main goal here is to burn deposits of fat. In order to achieve this training goal, a low training intensity (approximately 55% of the maximum heart rate) and a longer training period are required.

Cardiovascular training (cardio training): The primary goal is to increase stamina and fitness through an improved provision of oxygen through the cardiovascular system. In order to achieve this training goal, medium intensity (approximately 75% of the maximum heart rate) with a medium training period is required.

Anaerobic (maximum) load training: The main goal of maximum load training is to improve recovery after short, intense loads in order to be able to quickly return to the aerobic zone. In order to achieve this training goal, a high intensity (approximately 90% of the maximum heart rate) with short, intense load is required, which is followed by a recovery phase in order to prevent muscle fatigue.

Example:
For a 45-year-old man, the maximum heart rate is 175 (220 - 45 = 175).

+ The fat burning target zone (55%) is at approximately 96 beats/min. = (220 - age) x 0.55.
+ The cardio target zone (75%) is at approximately 131 beats/min. = (220 - age) x 0.75.
+ The maximum heart rate for an anaerobic load training (90%) is at approximately 157 beats/min. = (220 - age) x 0.9.

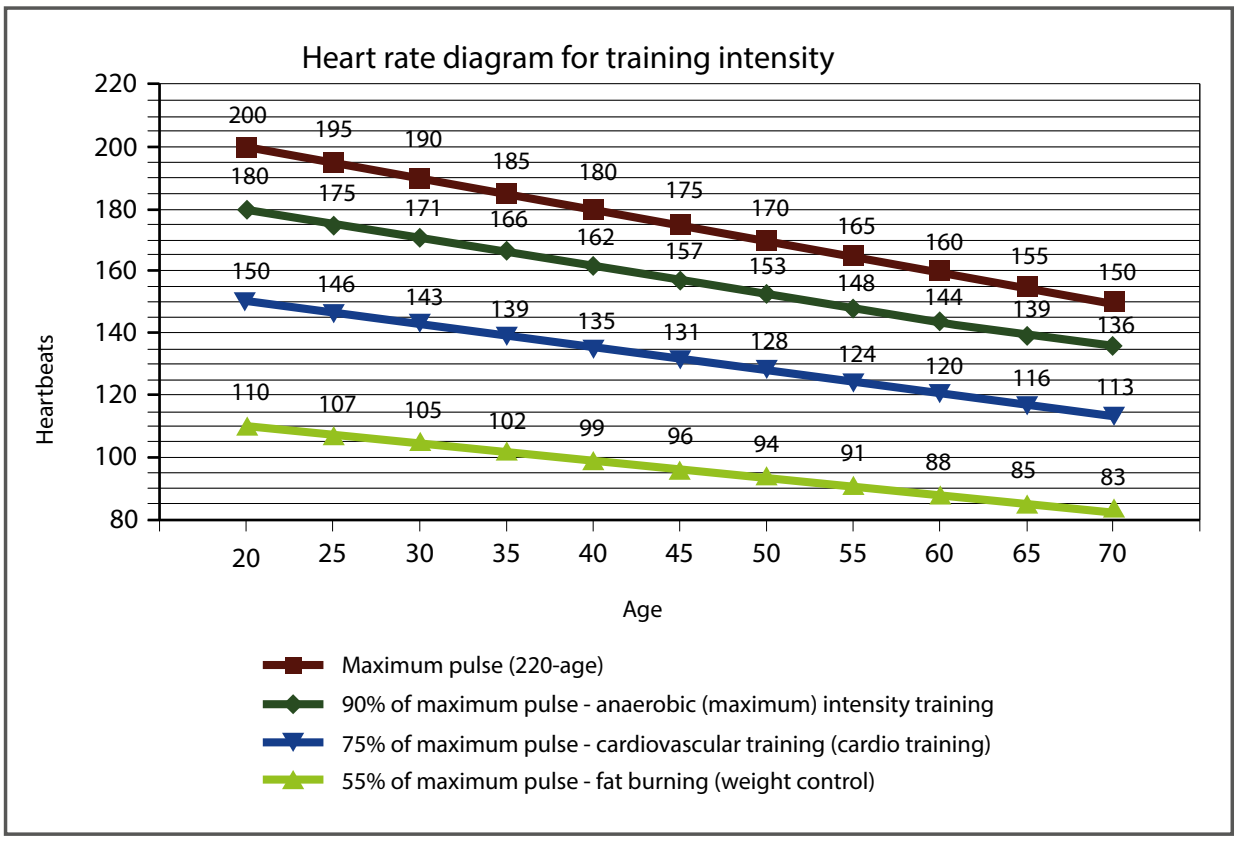

4.2 Workout journal

(Copy template)

Date | Distance | Time (min.) | Resistance level | Training weight | Ø Pulse | Calories burnt | I feel ... | Body weight

4.3 Excercise Recommendations

In this chapter you find exercise recommendations for training with your device.

Excercise 1

1. Hands and feet are at shoulder width.
2. Raise your hands above your head and bend your arms slightly. (Fig. 21).
3. Keep your arm bends angled and pull the handles downwards.
4. Tighten your abdominal muscles and bend your knees. (Fig. 22).
5. Extend your arms along your hips and keep your knees bent. (Fig. 23).
6. Slowly raise your arms and return to your starting position (Fig. 25).

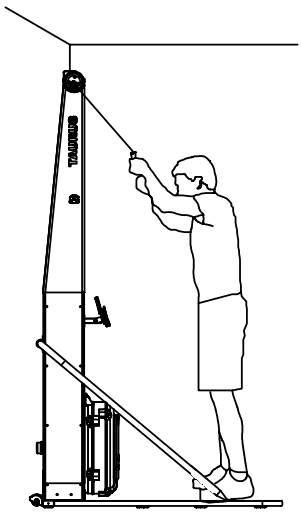

Fig. 21

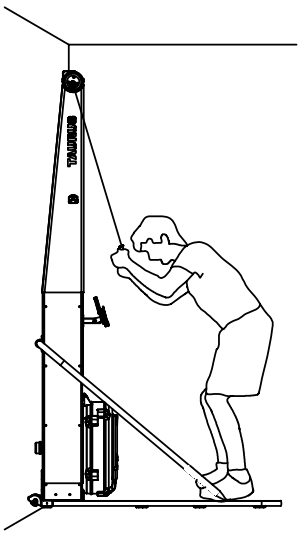

Fig. 22

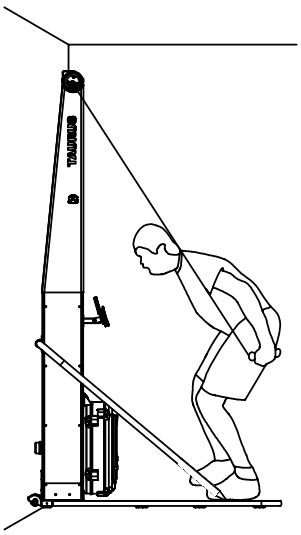

Fig. 23

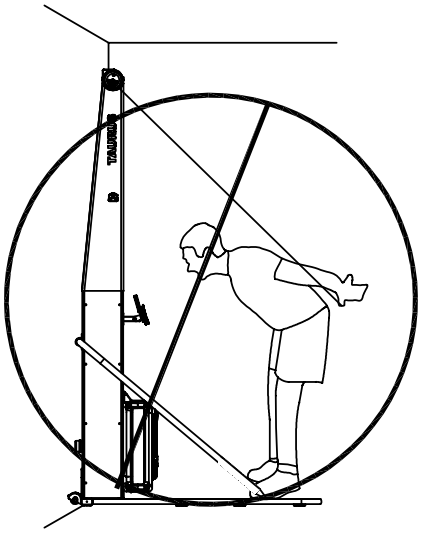

Fig. 24

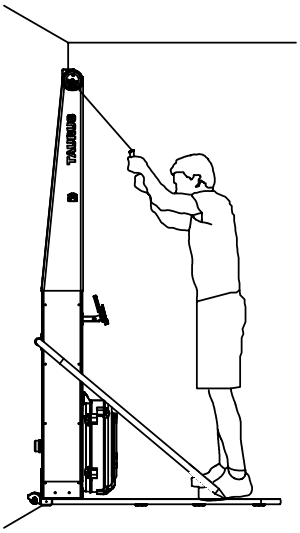

Fig. 25

Excercise 2

1. Hands and feet are at shoulder width.
2. Slightly lift one arm while the opposite arm is guided downward.
3. Pull the handle of the upper arm downwards while you pull the handle of the lower arm up.
4. Alternate the arm movement smoothly.
5. Slightly bend the pulling arm to increase muscle tension and training intensity.
6. Slowly guide your arms to the starting position.

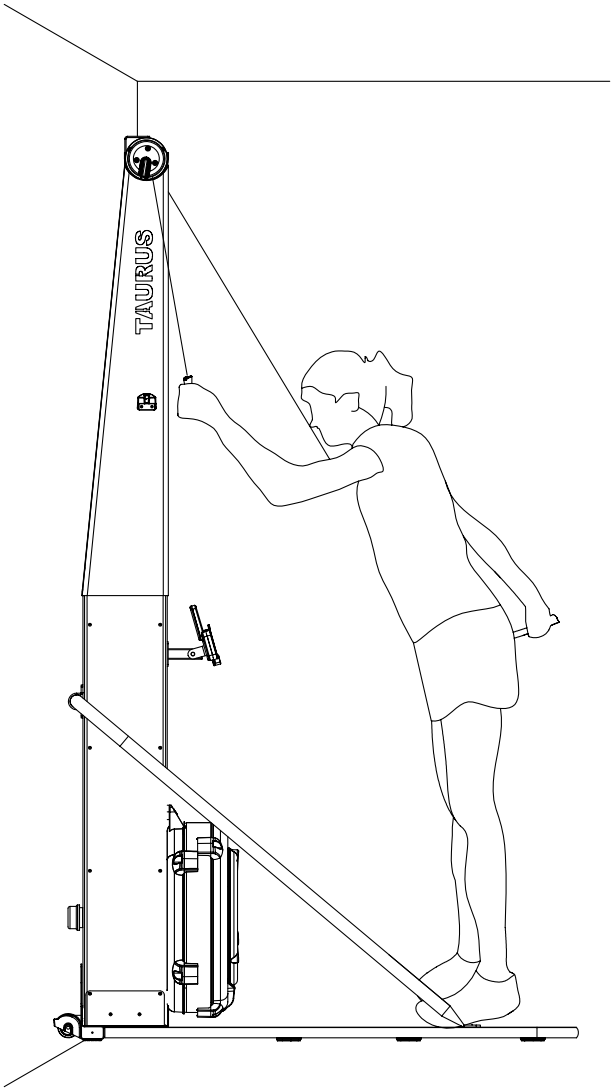

Fig. 26

4.4 Wireless Connection and Fitness Apps

This console is equipped with a wireless interface. Please take note that your mobile device needs to be compatible with the wireless interface of the treadmill.

To use training apps you will have to activate the wireless connection function on your mobile device (tablet or smart phone) and start the fitness app. Select your fitness equipment. Please follow the instructions given in the app. You will find the name of your fitness euqipment on a small sticker on the back of the console.

You will find the fitness apps in the app stores of Google or Apple. There you will find the app "Kinomap". Please note that these apps are produced by an external manufacturer. Fitshop does not take any responsibility regarding the availability, functionality or contents of these programmes.

ⓘ IMPORTANT NOTE

Some entertainment apps are provided and maintained by third-party providers. Pre-installed apps may change, be updated, or be removed over time. These changes are normal and do not affect your statutory warranty rights. To make sure the pre-installed apps are working correctly, they must be updated regularly. If needed, the respective app will notify you to do so. To update the app, you need a google account. A google email is sufficient. Just follow the instructions on the screen to perform the update. Please note: The system is set up only for the pre-installed apps. Do not install any additional apps as their proper functionality can not be guaranteed. The installation of other apps might cause technical issues.

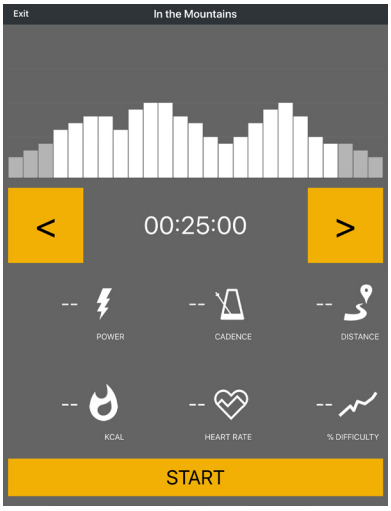

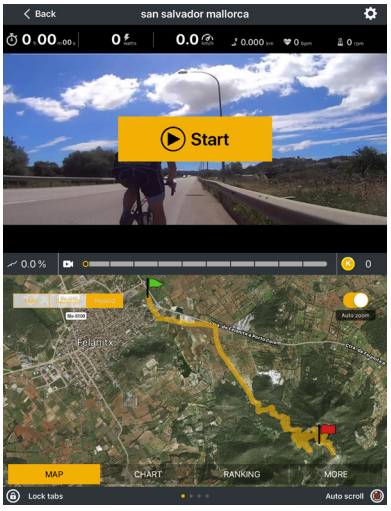

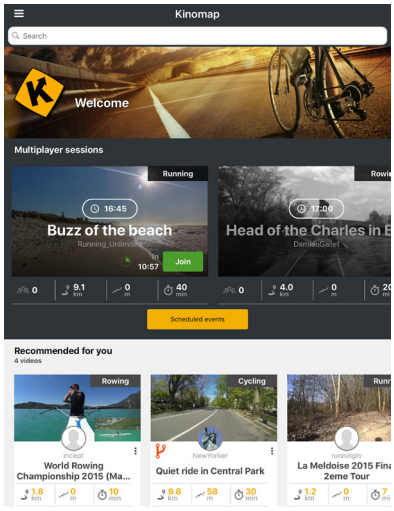

Example: Kinomap

5.1 General Instructions

⚠ **WARNING**

+ The storage location should be chosen so that improper use by third parties or children can be prevented.
+ If your equipment does not have transportation wheels, the equipment must be disassembled before transportation.

► **ATTENTION**

+ Make sure that the equipment is protected from moisture, dust and dirt in the selected storage location. The storage location should be dry and well ventilated and have a constant ambient temperature between 10°C and 35°C.

5.2 Transportation Wheels

► **ATTENTION**

If you want to transport your equipment over particularly sensitive and soft floor coverings, such as parquet, planks or laminate, lay out the transport route with cardboard or similar to avoid possible floor damage.

1. Stand behind the equipment and lift it until the weight is transferred to the transportation wheels. After that, you easily can move the equipment to a new position. For long transport distances the equipment should be disassembled and safely packed.
2. Select the new location by following the instructions in the section 1.5 of this manual.

6.1 General Instructions

⚠ **WARNING**

+ Do not make any improper changes to the equipment.
+ To maintain the safety level of the equipment, it must be checked regularly for damage and wear - especially on the foot straps, fasteners, handle hoses and seat.

⚠ **CAUTION**

+ Damaged or worn components may affect your safety and the life of the equipment. Therefore, immediately replace damaged or worn components. In such a case, contact the contract partner. The equipment must not be used until it has been repaired. If necessary, use only original spare parts.

► **ATTENTION**

+ In addition to the instructions and recommendations for maintenance and care given here, additional service and/or repair work may be necessary; this must only be carried out by authorised service technicians.

6.2 Faults and Fault Diagnosis

The equipment undergoes regular quality controls during production. Nevertheless, faults or malfunctions may occur. Frequently, individual parts are responsible for these disturbances, an exchange is usually sufficient. Please refer to the following overview for the most common errors and how to correct them. If the equipment still does not function properly, contact your contract partner.

Fault	Cause	Solution
Heart rate is not received	+ Sources of interference in the room + unsuitable chest strap + Wrong position of chest strap + Batteries empty	+ Eliminate sources of interference (e.g. mobile phones, loudspeakers, WLAN, lawn mower and vacuum cleaner robots ...) + Use a suitable chest strap (see recommended accessories). + Reposition chest strap and/or moisten electrodes + Changing batteries
LED error – software error etc.	Console has no power supply	+ Hold Reset to start the console again. + Changing batteries + Contact a service technician of your contract partner.
Scraping noises	Cable or pulleys not running smoothly or damaged	Perform a visual check of the route of the cable or of the pulley or of the pulley guide
Squeaking & cracking noises	Screws are either too loose or too tight	Check that screws are correctly tightened or lubricate

6.3 Error Codes and Troubleshooting

The electronics of the equipment continuously carries out tests. In case of deviations, an error code appears on the display and normal operation is stopped for your safety.

Please contact the contract partner for technical support.

6.4 Maintenance and Inspection Calendar

To avoid damage from body sweat, the equipment must be cleaned with a damp towel (no solvents!) after each training session.

The following routine tasks must be performed at the specified intervals:

Part	Weekly	Monthly	Half-yearly
Display console	C	I	
Ropes and pulleys	C/I		
Plastic covers	C	I	
Cable guides	I		
Screws and cable connections		I	
Legend: C = clean; I = inspect			

7 DISPOSAL

At the end of its operational life, this equipment cannot be disposed of in normal household waste. Instead, it must be disposed of via an electricals recycling centre. Further information can be obtained from your local authority's recycling service.

The materials can be recycled as per their symbols. Through the reuse, recycling of materials or other forms of recovery of old equipment, you make an important contribution to the protection of the environment.

8 RECOMMENDED ACCESSORIES

To make your training experience even more efficient and pleasant, we recommend that you add suiting accessories to your fitness equipment. For ski trainers this could for example be a **floor mat**, which makes your fitness equipment stand more securely and also protects the floor from sweat or **silicone spray** to keep moving parts in good shape.

If you have purchased a fitness machine with pulse training and want to train your heart rate, we strongly recommend that you use a compatible **chest strap**, as this ensures optimum transmission of the heart rate.

Our range of accessories offers the highest quality and makes training even better. If you would like to find out more about compatible accessories, please go to the detail page of the product in our webshop (the easiest way is to enter the article number in the search field above) and go to the recommended accessories on this page. Of course, you can also contact our customer service: by telephone, e-mail, in one of our branches or via our social media channels. We will be happy to advise you!

chest strap

lubricant

floor mat

9.1 Serial Number and Model Name

In order to provide you with the best possible service, please have the model name, article number, serial number, exploded drawing and parts list ready. The corresponding contact options can be found in chapter 11 of this operating manual.

ⓘ **NOTICE**
The serial number of your equipment is unique. It's located on a white sticker.

Enter the serial number in the appropriate field.

Serial number:

Brand / Category:

Taurus / Ski trainer

Model Name:

Elite Ski Trainer
Elite Ski Trainer Stand

SKU:

TF-EST
TF-EST-ST

9.2 Parts List: TF-EST

No.	Name	Supplier Parts No.	Specification	Qty.
1	Round straight pipe	7C0633012		1
2	Left Vertical Plate	7C0633026		1
3	Right Vertical Plate	7C0633027		1
4	Handle	3C0699006	PA+PU	2
5	Handle seat	3C0499002	PA	2
6	Pull Rope Small Pulley	3C0403001	Φ51.2*13.6	6
7	Bearing Clearance Spacer	3C0403004	Φ22*Φ8*8.25	12
8	Pull Rope	8C0603002	Φ4*4500mm	2
9	Bungee	8C0404002	Φ4*4000mm	2
10	Fixed Sea	3C0402002	PA	1
12	Bungee Cord Small Pulley	3C0403002	Φ35*9	8
13	Console Fixing Plate	7C0633001		1
14	Console	5C0601003	TZ-8145	1
15	Console Holder	7C0433001		1
18	Strengthening Plate	7C0633016		1
19	Base Plate	7C0633017		1
23	Wall Sleeve Rubber	3R3299007	Black	1
24	Winding Wheel	3C0403005	Φ64*Φ40.4*79	2
25	Shaft Assembly	6C0402002	Φ17*Φ110*249.5	1
26	Sensor Fixing Plate	7C0433012		1
28	Bearing	481000010	16003ZZ	1
29	Long Spacer Sleeve	6C0403001	OD22*ID17*32.5	2
30	Short Spacer Sleeve	6C0403002	OD22*ID17*24	2
31	Wave Washer	453481701	OD23*ID17.1*T0.3	1
32	One Way Bearing	481000025	Φ35*16	2
33	Sensor Wire	5C0406001		1
34	VR	5C0405003		1
35	VR Connecting Wire	5C0405004		1
38	Bolt	425946001	M6*30	2
39	Bolt	426346002	M8*35	6
40	Washer	451540803	OD16*ID8.5*T1.5	12
42	Nylon Nut	442530601	M6	12

43	Nylon Nut	442530802	M8	7
44	Bolt	425946002	M6*12	60
45	Bolt	426346003	M8*70	1
46	Self Tapping Screw	414141001	ST4.2*L16mm	8
47	Bolt	423153002	M4*45	1
48	Cross Head Screw	424153002	M5*10	8
49	Cross Head Screw	424153006	M5*75	4
50	Bolt	425152004	M6*40	1
51	Hex Nut	441530101	M4	1
52	Hex Nut	441530501	M5	4
53	Bolt	426153006	M8*15	1
54	Cross Head Screw	425153008	M6*10	2
55	Self Tapping Screw	414445001	ST4.2*L12mm	5
56	Washer	451540603	OD18*ID6.5*T1.5	1
57	Bolt	425553006	M6*15	4
59	Bearing Cover	3C0402003	TPR	1
60	Flywheel Cover Back	8C0608010	ABS	1
61	Flywheel Cover Front	3R5101002	ABS	1
62	Fan adjustment cover	3R5101001	ABS	1
63	Flywheel	8R3208006		1
64	Counterweight Disk	7R5133021		1
65	Sensor Magnet	8R0506002	Φ8*2	1
66	Spring Washer	452580001	ID6.5*T1.6	2
67	Tube Plug	3C0404001	PVC	1
68	VR Fixing Plate	7R5133010	98*78*2.0	1
69	Mesh Plate	8R3208004	64*1434	1
70	Mesh Locking Block	3R3202029	PA	2
72	Washer	451520601	OD16*ID6.5*T1.0	4
73	Washer	451540801	OD20*ID8.5*T1.5	1
74	Plastic Washer	3C0499006	Φ20*Φ8.5*2	2
75	Screw	411141006	ST3.0*25	4
76	Bearing	481000048	6003ZZ	4
77	Bearing	481000060	6203ZZ	1
78	Panel	7C0633004		2
79	Front Connecting Platte	7C0633007		1

80	Back Connecting Platte	7C0633008		1
81	Panel auxiliary tube	7C0633009		1
82	Pulley Support	7C0633010		1
83	Pulley Plate	7C0633014		2
84	Decorative cover for pulley bracket	3C0602001	ABS	2
85	Pulley bracket	3C0602002	PA	2
86	connector for Round straight pipe	3C0602003	PA	2
87	Left Handlebar seat	3C0699001	PP+PE	1
88	Right Handlebar seat	3C0699002	PP+PE	1
89	Bolt	425533002	M6*12	6
90	Magnetic fix plate	3R5199001	PA	1
91	Adjusting bolt	3R5199002	ABS	1
92	Screw, Round Head	413141101	ST4*10	10
93	Bolt	425143004	M6*20	9
94	Spacer for Magnetic fix plate	6R5101001	OD25*ID6.5*9.3	1
95	Washer	451560602	OD26*ID6.5*2.0	2
96	Strong Magnetic	8B0506001	Φ25*10	1
97	Bearing	481000007	61905ZZ	2
98	C-clip	461100010	Φ25	2
99	Z-shaped rubber head knob	3R3605001	M5*8	4
100	Bearing plate	7C0633015		2
101	Self Tapping Screw	413142007	ST4*38	3
102	Bolt	424133002	M5*15	8
103	Wave Washer	453481401	OD21*ID14*T0.3	1
104	Aluminum Disk	8R5108003		1
106	Packaging auxiliary tube	7R3233024		1
107	Allen key	6B0106001	4*4	1
108	Nylon Nut	442330501	M5	8
109	Rear cover fixing plate	7C0633025		1
110	Washer	451140802	OD11*ID6*T1.5	24
111	Base connection plate	7C0633022		2
112	fixed bracket	7C0633023		1
113	Expansion Screw M5*50	424376001		4
114	Cross Head Screw M4*12	423153001		2
115	Fixed seat reinforcement plate	7C0633020		2

116	Fixed seat guard plate	7C0633021		2
117	VR support sleeve	8R5108005		3
118	Bolt M6*8	425153015		4
119	left side panel	7C0633005		2
120	open-end wrench	6R0206001		1

9.3 Parts List: TF-EST-ST

No.	Name	Supplier Parts No.	Specification	Qty.
16	Connecting Pipe Fixing Plate	7C0433007		1
17	Connecting Pipe	7C0433011		1
20	Front End Cap (L)	3R3204004	PP	1
21	Front End Cap (R)	3R3204005	PP	1
22	Wheel for Moving	3R3203002	JE348- 50*6*21.5	2
27	Bottom Board	8C0608013	1200*600*T25	1
36	Lock nut	448761001	M6	6
37	Lock washer	456788001	M8	6
38	Bolt	425946001	M6*30	6
41	Washer	451540601	OD13*ID6.5*T1.5	2
44	Bolt	425946002	M6*12	4
46	Self Tapping Screw	414141001	ST4.2*L16mm	2
50	Bolt	425152004	M6*40	2
56	Washer	451540603	OD18*ID6.5*T1.5	2
58	Foot Pad	3C0499005	Φ60*7	4
71	Self Tapping Screw	416251001	ST5.5*20	4
121	Self Tapping Screw	411251002	ST3*10	6

9.4 Exploded Drawings: TF-EST and TF-EST-ST

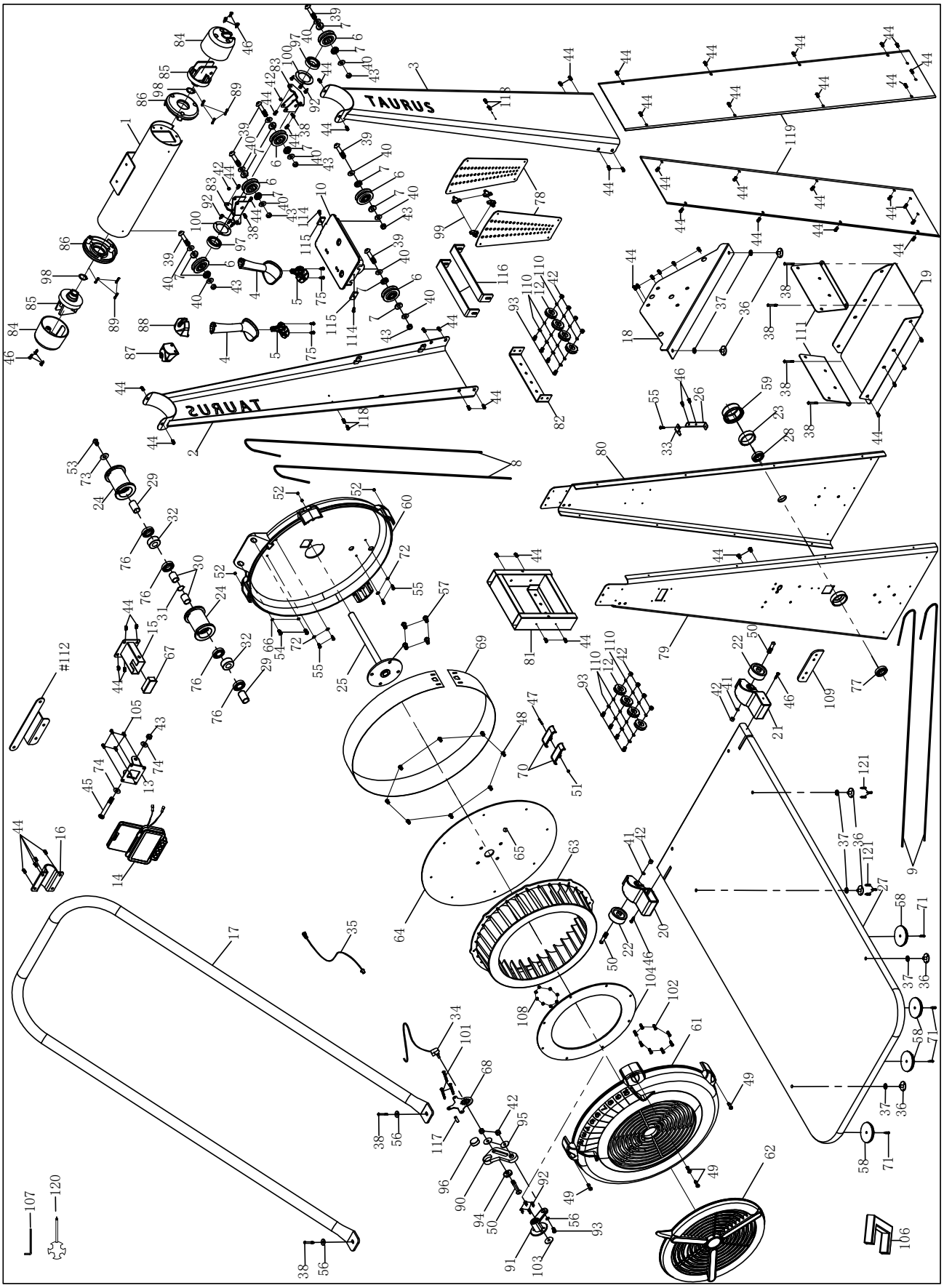

10 WARRANTY

Products from TAURUS® are subject to strict quality control. However, if a fitness equipment purchased from us does not work perfectly, we take it very seriously and ask you to contact our customer service as indicated. We are happy to help you by phone via our service hotline.

Error Descriptions
Your fitness equipment is developed for long-term, high-quality training. However, should a problem arise, please first read the operating instructions. For further assistance, please contact your contract partner or call our service hotline. To ensure your problem is solved as quickly as possible, please describe the defect as exactly as possible.

In addition to the statutory warranty, we provide a warranty for every fitness equipment purchased from us according to the following provisions.

Your statutory rights are not affected.

Warrantee
The warrantee is the first/original buyer.

Warranty periods
The following warranty periods begin on delivery of the fitness equipment.

Warranty period
The warranty periods, shown on our web shop, begin on delivery of the fitness equipment. The respective warranty periods for your equipment can be found on its product website.

Repair Costs
According to our choice, there will either be a repair, a replacement of individual damaged parts or a complete replacement. Spare parts, that have to be mounted while assembling the equipment, have to be replaced by the warrantee personally and are not a part of repair. After the expiration of the warranty period, the responsibility for parts costs, repair costs, installation costs and delivery costs lies with the warranty holder.

The terms of use are defined as follows:

+ Home use: solely for private use in private households up to 3 hours per day
+ Semi-professional use: up to 6 hours per day (e. g. rehabilitation centres, hotels, clubs, company gyms)
+ Professional use: more than 6 hours per day (e. g. commercial gyms)

Warranty Service
Within the warranty period, equipment which develops faults as a result of material or manufacturing defects, will be repaired or replaced at our discretion. Ownership of equipment or parts of equipment which have been replaced is transferred to us. The warranty period is not extended nor does a new warranty period begin following repair or replacement under the warranty.

Warranty Conditions
For the warranty to be valid, the following steps must be taken:

Please contact our customer service by email or phone. If the product under warranty has to be sent in for repair, the seller bears costs. After expiry of the warranty, the buyer bears the costs of transport and insurance. If the fault is covered by our warranty, you will receive a new or repaired equipment in return.

Warranty claims are invalid in case of damage resulting from:

+ misuse or improper handling
+ environmental influences (moisture, heat, electrical surge, dust, etc.)
+ failure to follow the current safety measures for the equipment
+ failure to follow the operating instructions
+ use of force (e. g. hitting, kicking, falling)
+ interventions which were not carried out by one of our authorized service centres
+ unauthorised repair attempts

Proof of Purchase and Serial Number
Please make sure that you are able to provide the appropriate receipt when claiming on your warranty. So that we can clearly identify the model of your equipment, and for the purposes of our quality control, you will need to give the serial number of your equipment, when contacting the service team. Where possible please have your serial number and your customer number ready when you call our service hotline. It will help us to deal with your request swiftly.

If you cannot find the serial number on your fitness equipment, our service team is at your disposal to offer further information.

Service outside of the Warranty Period
We are also happy to issue an individual cost estimate if there is a problem with your fitness equipment after the warranty has expired, or in cases which do not fall under the terms of the warranty, e. g. normal wear and tear. Please contact our customer service team to find a quick and cost-effective solution to your problem. In such a case you will be responsible for the delivery costs.

Communication
Many problems can be solved just by speaking to us as your specialist supplier. We know how important it is to you as a user of the fitness equipment to have problems solved quickly and simply, so you can enjoy working out with minimal interruption. For that reason, we also want to resolve your queries quickly and in a straightforward manner. Thus, please always keep your customer number and the serial number of the faulty equipment handy.

11 CONTACT

DE

TECHNIK

+49 4621 4210-900
+49 4621 4210-698
technik@fitshop.de
Öffnungszeiten entnehmen Sie unserer Homepage.

SERVICE

0800 20 20277 (kostenlos)
04621 4210 - 0
info@fitshop.de
Öffnungszeiten entnehmen Sie unserer Homepage: https://stg.fit/statita

DK

TEKNIK OG SERVICE

80 90 16 50
+49 4621 4210-945
info@fitshop.dk
Åbningstider kan findes på hjemmesiden: https://stg.fit/statit7

UK

CUSTOMER CARE

+44 141 737 2249 or +44 141 876 3972
customercare@fitshop.co.uk
You can find the opening hours on our homepage: https://stg.fit/statitd

FR

TECHNIQUE & SERVICE

+33 (0) 189 530984
+49 4621 42 10 933
info@fitshop.fr
Vous trouverez les heures d'ouverture sur notre site Internet: https://stg.fit/statit4

BE

TECHNIQUE & SERVICE

02 732 46 77
+49 4621 4210 933
info@fitshop.be
Vous trouverez les heures d'ouverture sur notre site Internet: https://stg.fit/statit8

ES

TECNOLOGÍA Y SERVICIOS

938 805 790
info@fitshop.es
Consulta nuestro horario de apertura en la página web: https://stg.fit/statit5

NL

TECHNISCHE DIENST & SERVICE

+31 172 619961
service@fitshop.nl
De openingstijden vindt u op onze homepage: https://stg.fit/statit3

INT

TECHNICAL SUPPORT & SERVICE

+49 4621 4210-944
service-int@fitshop.de
You can find the opening hours on our homepage: https://stg.fit/statita

PL

DZIAŁ TECHNICZNY I SERWIS

22 307 43 21
+49 4621 42 10-948
info@fitshop.pl
Godziny otwarcia można znaleźć na stronie głównej: https://stg.fit/statit6

AT

TECHNIK & SERVICE

0800 20 20277 (Freecall)
+49 4621 42 10-0
info@fitshop.at
Öffnungszeiten entnehmen Sie unserer Homepage: https://stg.fit/statitb

CH

TECHNIK & SERVICE

0800 202 027
+49 4621 42 10-0
info@fitshop.ch
Öffnungszeiten entnehmen Sie unserer Homepage: https://stg.fit/statit9

Please find a detailed overview including address and opening hours for all stores of Fitshop UK on the following website:

www.fitshop.co.uk/storelocator

WE LIVE FITNESS

WEBSHOP AND SOCIAL MEDIA

The Fitshop Group is Europe's largest specialist for home fitness equipment with currently 65 stores and one of the world's most renowned online mail order companies for fitness equipment.

Fitshop UK is part of the Fitshop Group. Private customers order via the 25 web shops in the respective national language or have their desired equipment assembled on site. In addition, the company supplies fitness studios, hotels, sports clubs, companies and physio practices with professional equipment for endurance and strength training.

The Fitshop group offers a wide range of fitness equipment from renowned manufacturers, high-quality in-house developments and comprehensive services, such as a build-up service and sports scientific advice before and after the purchase. The company employs numerous sports scientists, fitness trainers and competitive athletes.

Visit us also on our social media platforms or our blog!

FIT SHOP
https://www.fitshop.co.uk
www.fitshop.co.uk/blog

www.facebook.com/fitshop.co.uk

www.instagram.com/fitshop_uk

www.youtube.com/@fitshop_uk

TAURUS

cardiostrong

BODYCRAFT

BodyMax

TAURUS®

ELITE SKI TRAINER