BodyMax

ASSEMBLY AND OPERATING INSTRUCTIONS

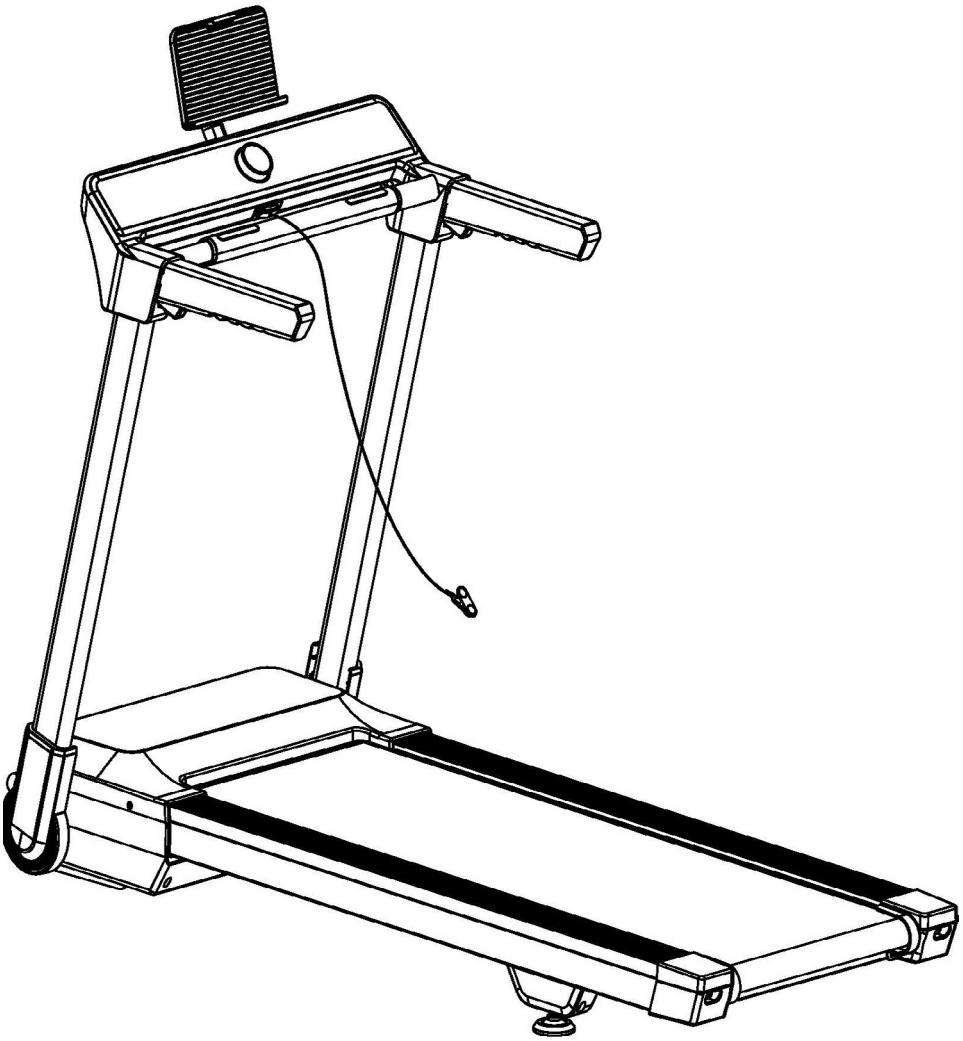

max. 120 kg

~ 20 Min.

62 kg

L 167 | W 74 | H 132

FSUKBMTR200.01.04

SKU: BM-TR200

Content

1	GENERAL INFORMATION	8
1.1	Technical Data	8
1.2	Personal Safety	9
1.3	Electrical Safety	10
1.4	Set-Up Place	11
2	ASSEMBLY	12
2.1	General Instructions	12
2.2	Scope of Delivery	13
2.3	Assembly	14
3	OPERATING INSTRUCTIONS	22
3.1	Console Display	22
3.2	Button Function	23
3.3	Programme Mode	25
3.4	Target Programme	25
3.5	Programme overview	26
3.6	Custom Programmes	28
3.7	Body Fat Analysis	29
3.8	Heart Rate Controlled Training	30
3.9	Reminder for Treadmill Lubrication	31
3.10	Standby	31
4	WORKOUT TIPS	32
4.1	General Instructions	32
4.1.1	Training clothes	32
4.1.2	Warming up and stretching	32
4.1.3	Medication	33
4.1.4	Used muscle groups	33
4.1.5	Exercise frequency	33
4.2	Workout journal	35
4.3	Wireless Connection and Fitness Apps	36
5	STORAGE AND TRANSPORT	37
5.1	General Instructions	37
5.2	Transportation Wheels	37
5.3	Folding Mechanism	38
5.3.1	Folding Up the Treadmill	38
5.3.2	Unfolding the Treadmill	38

6 TROUBLESHOOTING, CARE AND MAINTENANCE 40

6.1 General Instructions 40
6.2 Faults and Fault Diagnosis 40
6.3 Error Codes and Troubleshooting 41
6.4 Care and Maintenance 42
6.4.1 Adjusting the Running Mat 42
6.4.2 Re-tensioning the Running Mat 43
6.4.3 Lubricating the Running Mat 43
6.5 Maintenance and Inspection Calendar 44

7 DISPOSAL 44

8 RECOMMENDED ACCESSORIES 45

9 ORDERING SPARE PARTS 46

9.1 Serial Number and Model Name 46
9.2 Parts List 47
9.3 Exploded Drawing 53

10 WARRANTY 56

11 CONTACT 58

Dear customer,
Thank you for choosing training equipment from BodyMax.

BodyMax is your reliable partner for home and commercial gym equipment. We are specialized in cardio and strength training machines for home and commercial use. Our products are not only strong, durable, and affordable but also designed to fit your personal needs.

The BodyMax headquarter is based in Rutherglen, Glasgow. Our brand was created with the intention of providing innovative exercise equipment at affordable prices for users of all training levels.

You can find further information at www.bodymax-fitness.com.

Intended Use

The equipment may only be used for its intended purpose.

The equipment is only suitable for home use. The equipment is not suitable for semi-professional (e.g. hospitals, associations, hotels, schools, etc.) and commercial or professional use (e.g. fitness studios).

Legal Notice

Fitshop GmbH
Europe's No. 1 for home fitness

International Headquarters
Flensburger Straße 55
24837 Schleswig
Germany

Management:
Christian Grau
Sebastian Campmann
Dr. Bernhard Schenkel

No. HRB 1000 SL
Local Court Flensburg
European VAT Number: DE813211547

Disclaimer

© BodyMax is a registered brand of the company Fitshop GmbH. All rights reserved. Any use of this trademark without the explicit written permission of Fitshop is prohibited.

Product and manual are subject to change. Technical data can be changed without advance notice.

FITSHOP

Europe's No.1 for Home Fitness

ABOUT THIS MANUAL

Please carefully read the entire manual before installation and first use. The manual will help you to quickly set up the system and explains how to safely use it. Make sure that all persons exercising with the equipment (especially children and persons with physical, sensory, mental or motor disabilities) are informed about this manual and its contents in advance. In case of doubt, responsible persons must supervise the use of the equipment.

Due to ongoing changes and software optimisations, the manual may have to be updated. If you notice any discrepancies during assembly or use, please refer to the manual uploaded to the webshop. The latest manual is always available there.

This equipment has been manufactured according to the latest safety knowledge. As far as possible, potential safety hazards which could cause injury have been eliminated. Make sure to carefully follow the instructions and that all parts are securely in place. If required, read through the instructions again to correct any mistakes.

Training devices must be classified according to accuracy and use. Accuracy classes are only applicable to devices that display training data.

Accuracy classes

Class A: high accuracy.
Class B: medium accuracy.
Class C: low accuracy.

The use classes explain the intended use of the training device.

Use classes

Class S (studio): professional and/or commercial use.
These training devices are intended for the use in training rooms of facilities such as sports clubs, school facilities, hotels, clubs and studios whose access and supervision is specifically regulated by the owner (person with legal responsibility).

Class H (home use): use at home.
These stationary training devices are intended for the use in private homes where access to the training device is regulated by the owner (person with legal responsibility).

Please pay close attention to the safety and maintenance instructions given here. The contract partner cannot be held liable for damage to health, accidents or damage to the equipment when it is not used in accordance with these instructions.

The following safety instructions may appear in this manual:

► **ATTENTION**
This notice indicates potentially hazardous situations which, if not avoided, may result in property damage.

⚠ **CAUTION**
This notice indicates potentially hazardous situations which, if not avoided, may result in slight or minor injuries!

⚠ **WARNING**
This notice indicates potentially hazardous situations which, if not avoided, may result in death or serious injuries!

⚠ **DANGER**
This notice indicates potentially hazardous situations which, if not avoided, will result in death or serious injuries!

ⓘ **NOTICE**
This notice indicates further useful information.

Retain these instructions in a safe place for future reference, maintenance or when ordering replacement parts.

1.1 Technical Data

Weight and Dimensions:

Gross item weight (including packaging):	72.5 kg
Net item weight (without packaging):	61.5 kg
Packaging dimensions (L x W x H):	174 cm x 77 cm x 31.5 cm
Setup dimensions (L x W x H):	167 cm x 74 cm x 131.5 cm
Maximum user weight:	120 kg
Usage class:	H

Motor and Speed Data:

Motor power:	2 HP (DC motor)
Maximum speed:	18 km/h
Minimum speed:	0.8 km/h
Speed increment:	0.1 km/h
Incline range:	0–12 levels
Incline increment:	1 level

Console Data:

Number of programs:	42
Custom user programs:	3
Heart rate programs:	2
Preset programs:	36
Body Fat Programme:	1

Display Information:

+ Time
+ Speed
+ Distance
+ Calories
+ Incline
+ Pulse

Other Information:

Power supply: Mains plug

Features:

+ Hand pulse sensors
+ Wireless Connection
+ chest strap compatible
+ Transport wheels
+ Tablet holder

1.2 Personal Safety

⚠ **DANGER**

+ Before you start using the equipment, you should consult your physician that this type of exercise is suitable for you from a health perspective. Particularly affected are persons who: have a hereditary disposition to high blood pressure or heart disease, are over the age of 45, smoke, have high cholesterol values, are overweight and/or have not exercised regularly in the past year. If you are under medical treatment that affects your heart rate, medical advice is absolutely essential.
+ Note that excessive training can seriously endanger your health. Please also note that heart rate monitoring systems can be inaccurate. If you notice any signs of weakness, nausea, dizziness, pain, shortness of breath, or other abnormal symptoms, stop exercising immediately and seek advice from your doctor if necessary.
+ The owner must communicate all warnings and instructions to the user.

⚠ **WARNING**

+ This equipment may not be used by children under the age of 14.
+ Children should not be allowed unsupervised access to the equipment.
+ Persons with disabilities must have a medical license and must be under strict observation when using the equipment.
+ The equipment is strictly for use by one person at a time.
+ If your equipment provides a safety key, the clip of the safety key must be attached to your clothing before starting your training. In the event of a fall, the EMERGENCY STOP of the equipment can be initiated.
+ If an emergency occurs and training has to be stopped abruptly, pull out the safety key, grab both handles, jump onto the side rails and wait until the treadmill has come to a complete stop.
+ Keep your hands, feet and other body parts, hair, clothing, jewellery and other objects well clear of moving parts.
+ During use, wear suitable sports clothing rather than loose or baggy clothing. When wearing sports shoes, make sure they have suitable soles, preferably made of rubber or other non-slip materials. Shoes with heels, leather soles, studs or spikes are unsuitable. Never exercise barefoot.

⚠ **CAUTION**

+ If your equipment needs to be connected to the power supply with a mains cable, make sure that the cable is not a potential tripping hazard.
+ Make sure that nobody is within the range of motion of the equipment during training so as not to endanger you or other persons.
+ Be aware that if adjustment devices are left protruding, they may impede the user's movement.
+ The safety level of the appliance can only be maintained if it is regularly checked for damage and wear.

ATTENTION

+ Do not insert any objects of any kind into the openings of the device.
+ To protect the equipment from use by unauthorised third parties, always remove the power cable (if existing) when not in use and store it in a safe place that is inaccessible to unauthorised persons (e.g. children).

1.3 Electrical Safety

DANGER

+ In order to reduce the risk of an electric shock, always unplug the equipment from the mains socket immediately after your workout, before assembly or dismantling, and before maintenance or cleaning. Do not pull on the cable.

WARNING

+ Do not leave the equipment unattended while the mains cable is plugged into the mains socket. During your absence, the mains cable must be removed from the mains socket to prevent improper use by third parties or children.
+ If the mains cable or plug is damaged or defective, contact your contract partner. Until repair, the equipment must not be used.

ATTENTION

+ The equipment requires a mains connection of 220-230 V with 50 Hz mains voltage.
+ The equipment may only be connected directly to an earthed socket using the supplied mains cable. Extension cables must conform to VDE guidelines. Always completely unwind the mains cable.
+ The socket must be protected by a fuse with a minimum fuse rating of "16 A, slow blow".
+ Do not make any changes to the mains cable or the mains plug.
+ Keep the mains cable away from water, heat, oil and sharp edges. Do not route the mains cable underneath the equipment or under a carpet or rug, and do not place any objects on top of it.
+ If your purchased item is equipped with a TFT console, software updates must be carried out regularly. Follow the instructions on the console to perform the update(s).
+ The software systems on gym equipment with TFT consoles are set up only for the pre-installed apps. Do not install any additional apps.

NOTICE

+ The pre-installed apps on TFT consoles are produced and provided by external manufacturers. Fitshop does not take any responsibility for the availability, functionality or contents of these apps.

1.4 Set-Up Place

⚠ **WARNING**

+ Do not place the equipment in main corridors or escape routes.

⚠ **CAUTION**

+ Make sure that there is a safety area behind the treadmill with a length of at least 2 m and a width at least equal to the width of the treadmill.
+ The training room should be well ventilated during training and not be exposed to any draughts.
+ Choose the place in which to set up the equipment such that there is enough free space/ clearance to the front, the rear and to the sides of the equipment.
+ The free area in the direction from which the exercise equipment is accessed must be at least 0.6 m larger than the exercise area.
+ The set-up and mounting surface of the equipment should be flat, loadable and solid.

► **ATTENTION**

+ The device may only be used in one building, in sufficiently tempered and dry rooms (ambient temperatures between 10°C and 35°C). The equipment should not be used outdoors or in rooms with high humidity (over 70%) like swimming pools.
+ A floor protective mat/equipment underlay can help to protect high-quality floor coverings (parquet, laminate, cork, carpets) from dents and sweat and can help to level out slight unevenness.
+ For Class S equipment, the exercise equipment may only be used in areas where access, supervision and control are specifically regulated by the owner.

Recommended free zone:

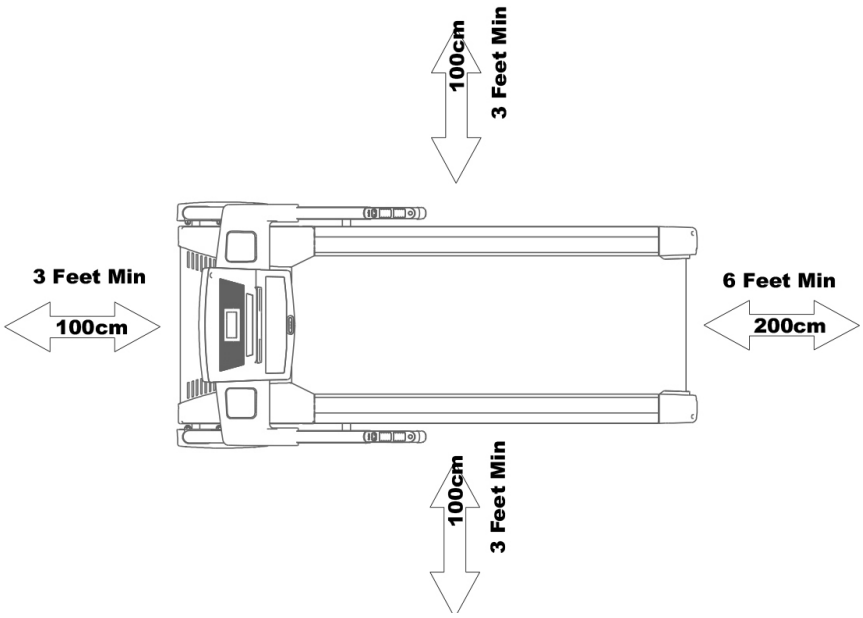

2.1 General Instructions

⚠ **DANGER**

+ Do not leave any tools, packaging materials such as foils or small parts lying around, as otherwise there is a danger of suffocation for children. Keep children away from the equipment during assembly.

⚠ **WARNING**

+ Pay attention to the instructions attached to the equipment in order to reduce the risk of injuries.

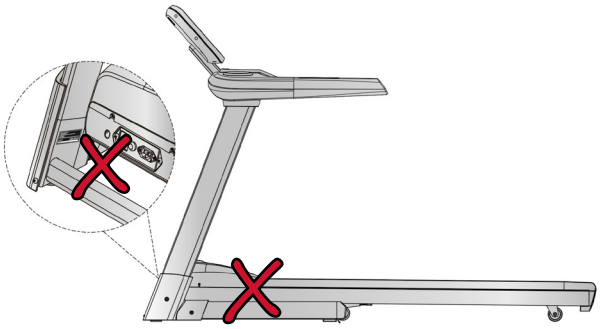

⚠ **CAUTION**

+ Ensure to have sufficient room for movement in each direction during assembly.
+ The assembly of the equipment must be carried out by at least two adults. If in doubt, seek the help of a third technically skilled person.

► **ATTENTION**

+ To prevent damage to the equipment and the floor, assemble the equipment on a mat or packaging board.

ⓘ **NOTICE**

+ In order to make the assembly as simple as possible, some screws and nuts to be used can already be pre-assembled.
+ Ideally, assemble the equipment at its later set-up place.

2.2 Scope of Delivery

⚠ **WARNING**

There is a transportation lock that prevents the treadmill from opening during transport. This transportation lock must be removed before assembly.

The scope of delivery consist of the following parts. At the beginning, check whether all parts and tools belonging to the device are included in the scope of delivery and whether damage has occurred. In the event of complaints, the contractual partner must be contacted directly.

⚠ **CAUTION**

If parts of the scope of delivery are missing or damaged, the assembly must not be carried out.

ⓘ **NOTICE**

Required tools: Alley Key, spanner

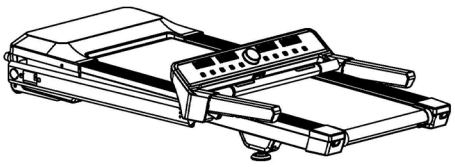 A	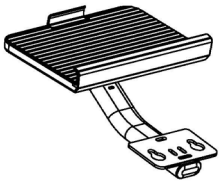 B	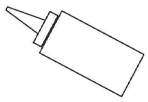 C
C52	E13	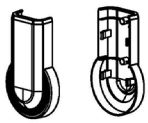 C05

B19 5# (1X)	B25 S14 (1X)
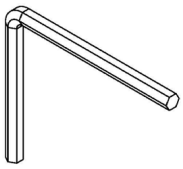	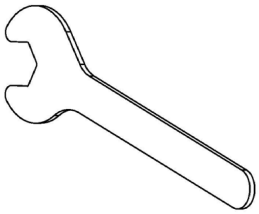

2.3 Assembly

Before assembly, take a close look at the individual assembly steps shown and carry out the assembly in the order given.

ⓘ **NOTICE**

+ First loosely screw all parts together and check that they fit properly. Tighten the screws using the tool only when you are instructed to do so.
+ Do not tighten the screws and bolts with excessive force as they could be damaged.
+ If you have difficulty recognising the graphics, we recommend that you open and/or download the PDF instructions stored in the webshop on your end device (e.g. smartphone, tablet or PC). There you have the option of zooming in closer. Please note that the Adobe Acrobat Reader programme must be installed on your end device in order to open the file.

Step 1: Unpacking and Positioning the Treadmill

1. Open the carton at the sides and remove the console bracket (B) and the covers (C05).
2. Leave the treadmill lying on the carton base, as this will make assembly easier.

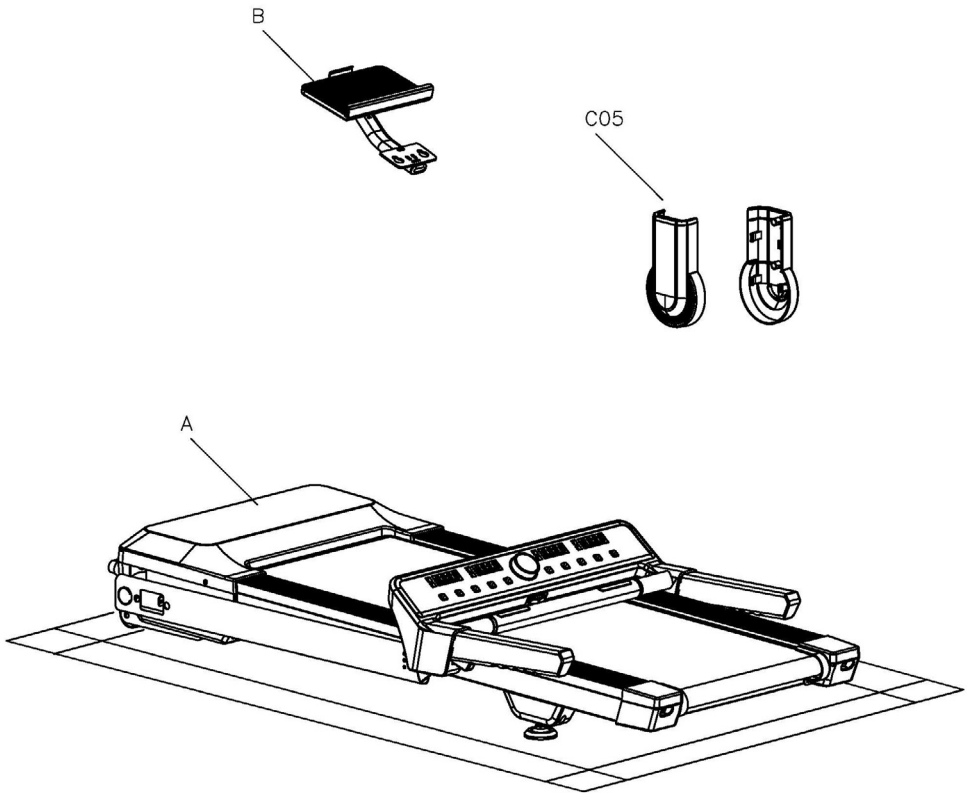

Step 2: Raising the Console Arms

1. Raise the console arms (A04) until they lock into place.

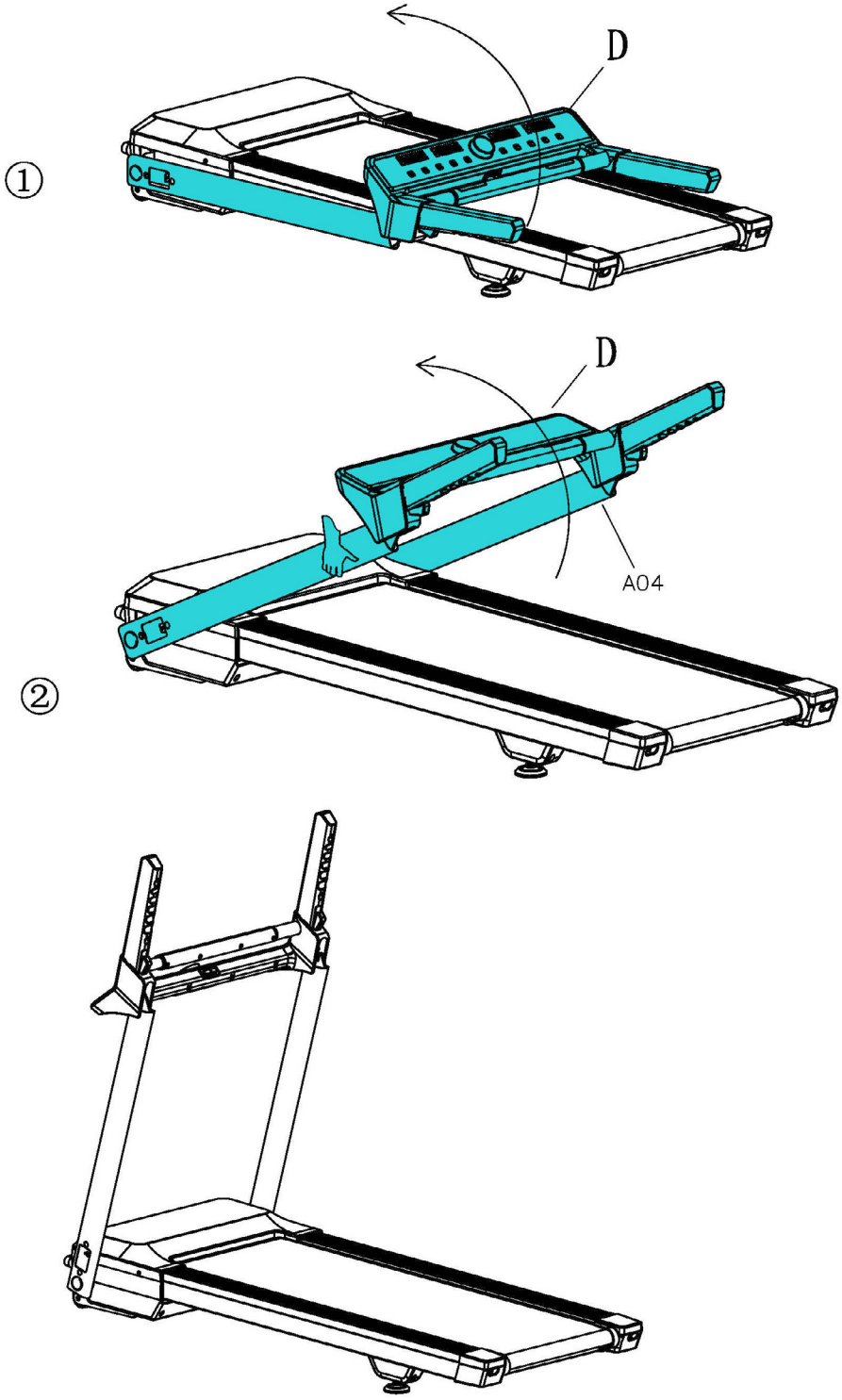

Step 3: Raising the Console

1. Press the toggle switches on the console arms.
2. Align the console (D) and raise it until it locks into place.

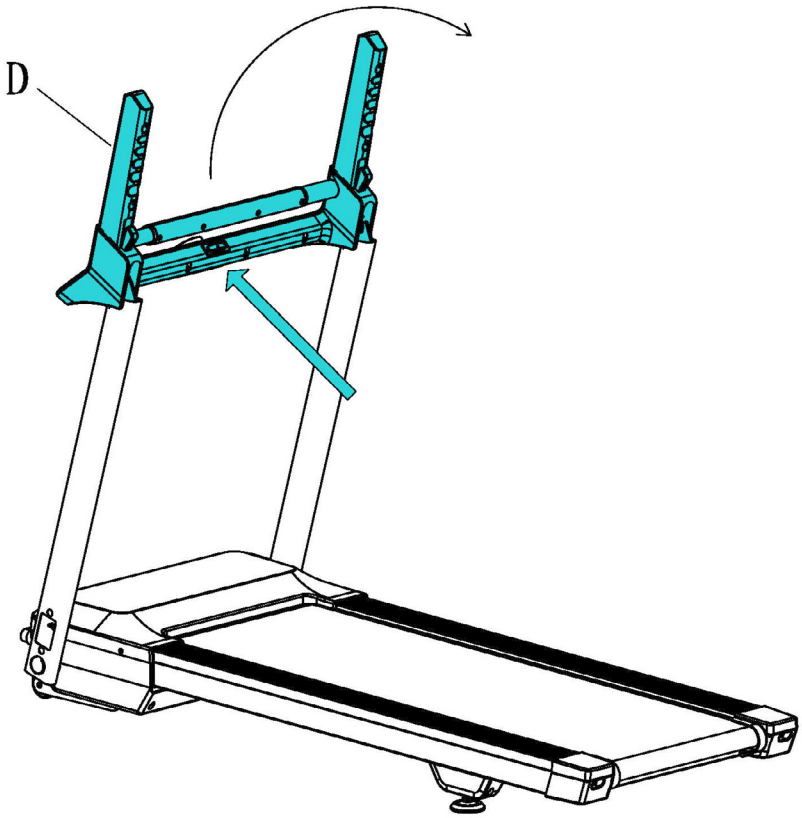

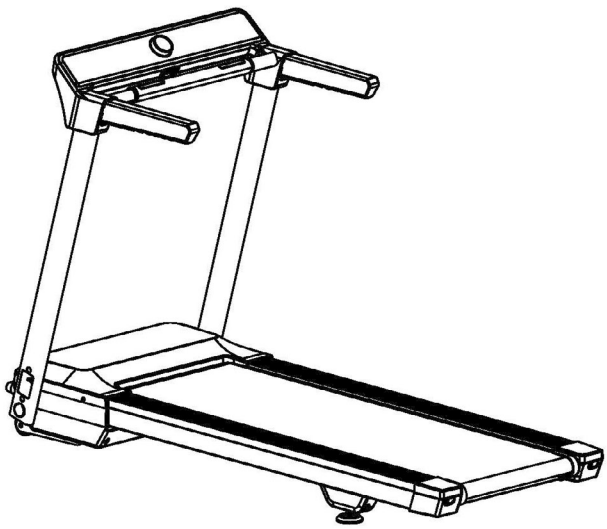

Step 4: Attaching the Covers

1. Attach the covers (C05) to the treadmill.

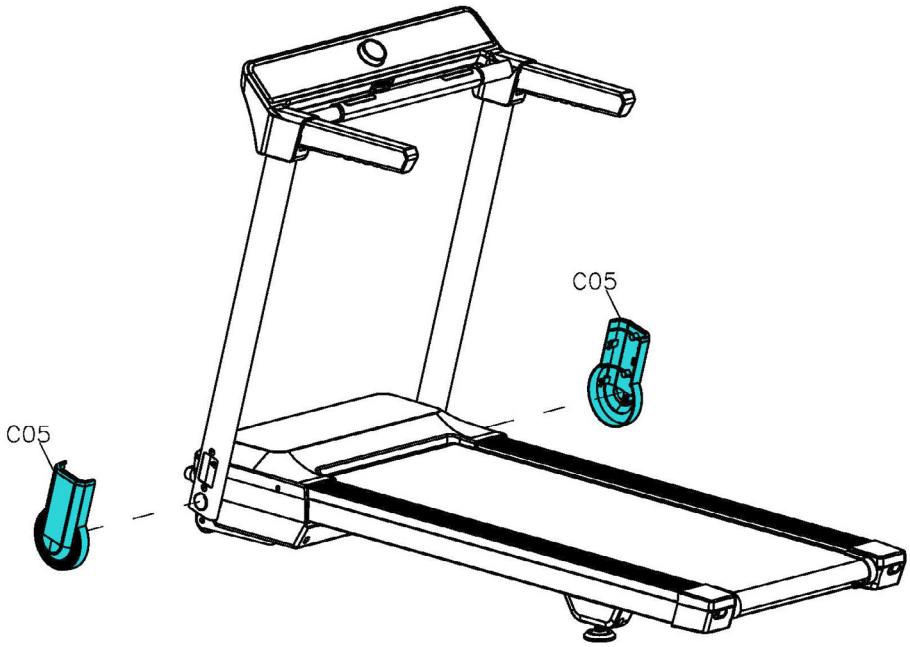

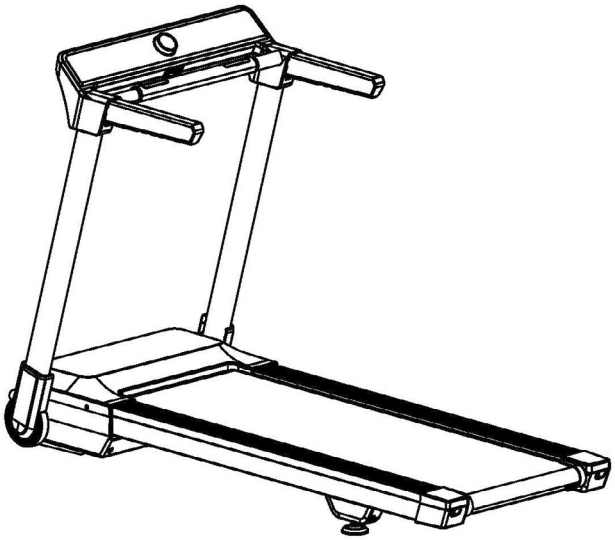

Step 5: Attaching the Tablet Holder

1. Attach the tablet holder (B) to the treadmill (A).

Use the Allen key (B19) to do so.

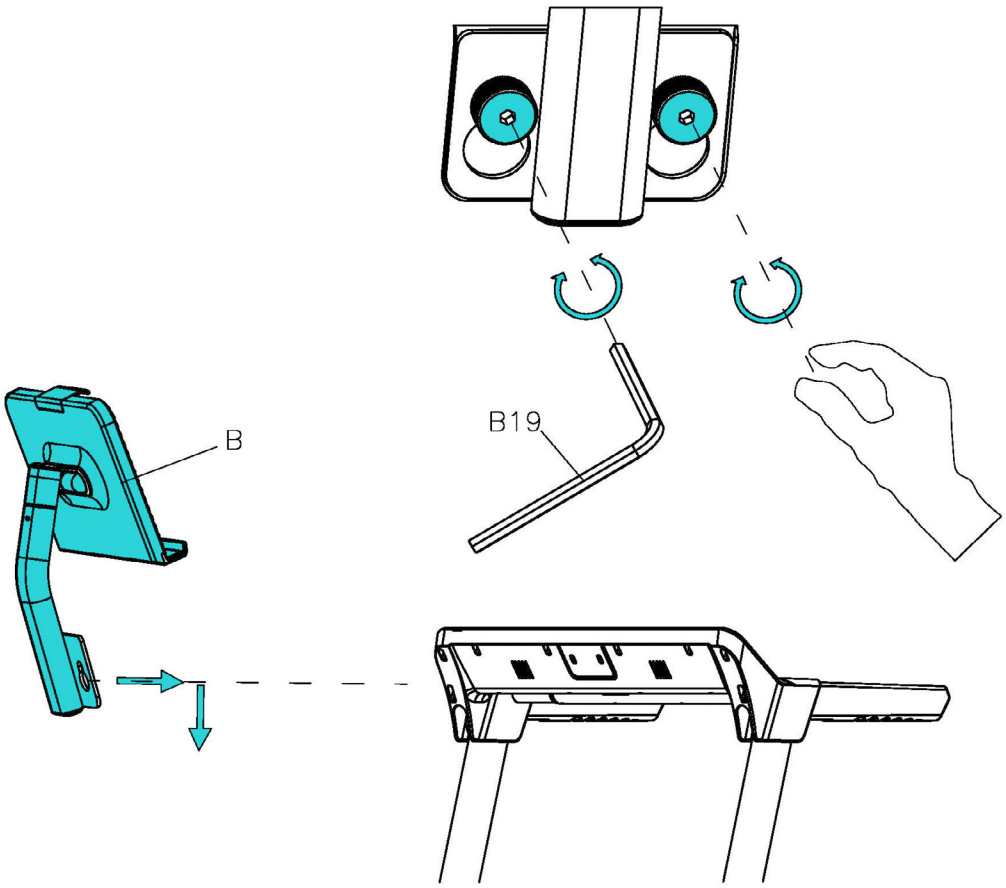

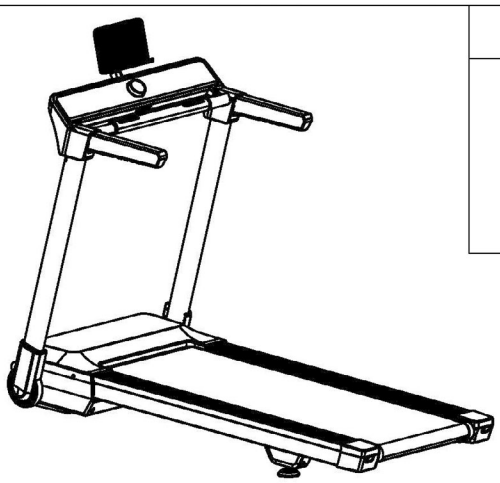

B19	B
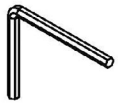	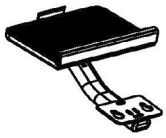

Step 6: Connecting the Safety Key

1. Attach the safety key (C52) to the console.

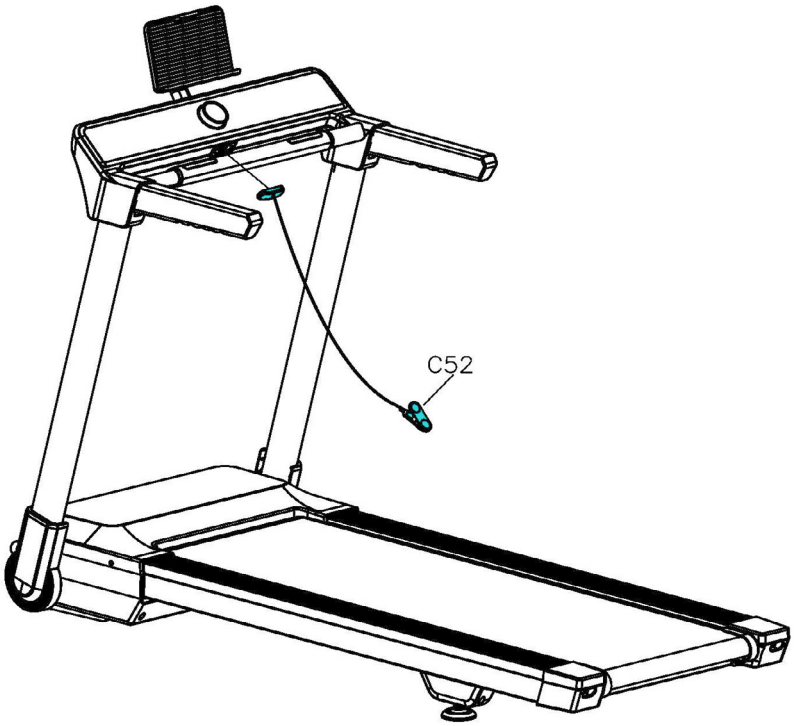

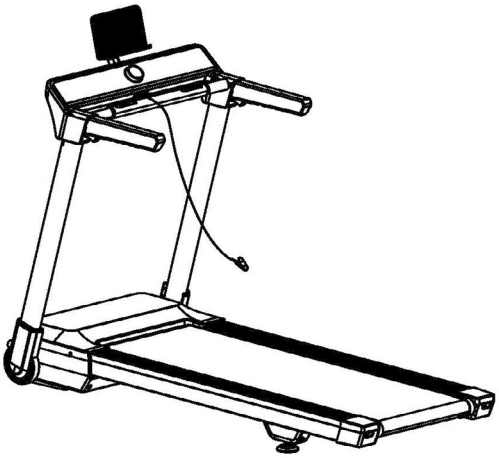

Step 7: Adjusting the Angle

1. Adjust the position and tilt of the tablet holder (B).

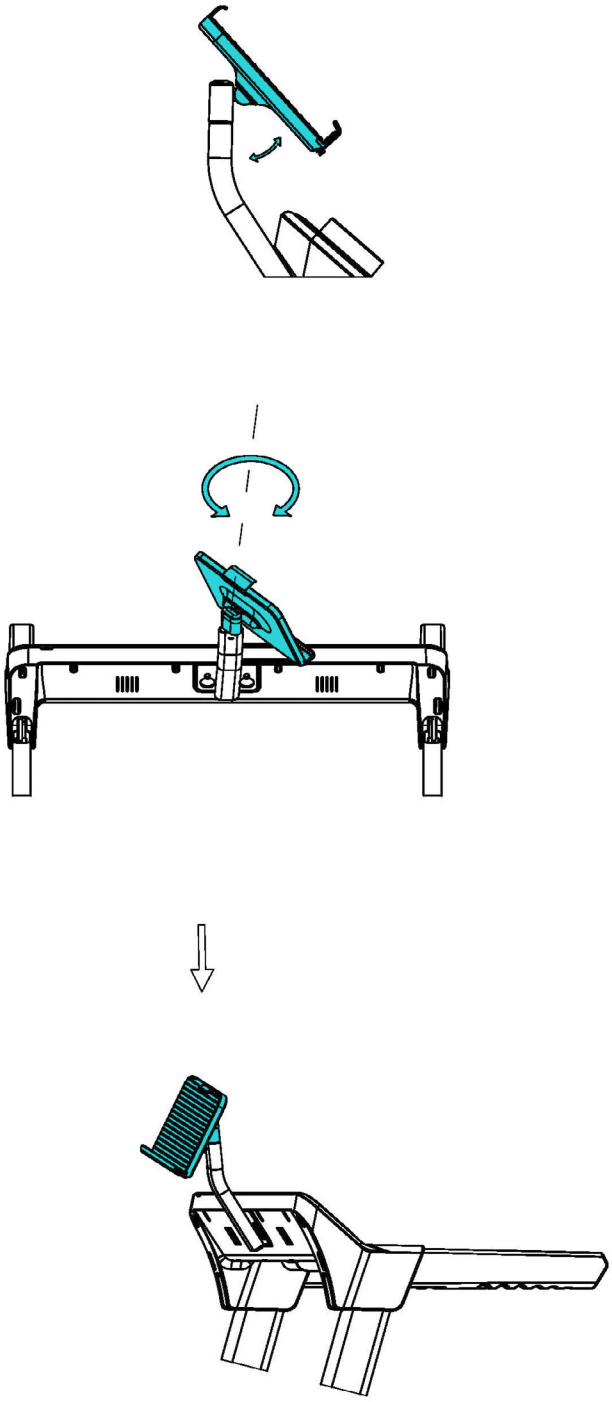

Step 8: Alignment of the feet

If the floor is uneven, you can stabilize the treadmill by turning the two setting screws under the main frame.

1. Lift the treadmill on the desired side and rotate the setting screws under the main frame.
2. Rotate the screws clockwise in order to remove them and to raise the running surface.
3. Rotate them counterclockwise in order to lower the running surface.

Use the spanner (B25) for this.

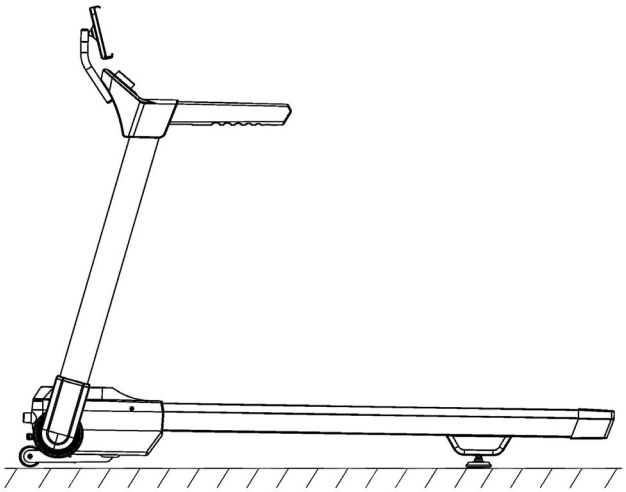

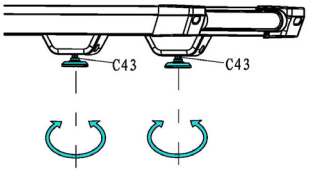

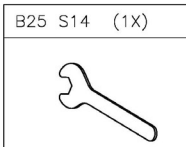

Step 9: Connecting the equipment to the mains supply

► **ATTENTION**
The equipment must not be connected to a multiple socket, otherwise it cannot be guaranteed that the equipment will be supplied with sufficient power. Technical errors can result.

Plug the power plug into a wall outlet that complies with the instructions in the chapter on electrical safety.

Correctly Getting On and Off

1. To step onto the treadmill, grip the handrails with both hands and step onto the treadmill one foot at a time.
2. To get off, grip the handrails with both hands and step off the treadmill one foot at a time.

NOTICE

+ Familiarise yourself with all the functions and setting options of the device before starting training. Have the proper use of this product explained to you by a specialist.
+ Always start your training with low intensity and increase evenly and gently. End your training with a cool-down phase. If you are unsure, please consult your physician.
+ Most new treadmills make a knocking noise caused by the running mat sliding over the rollers. The time it takes for the noise to subside depends on the intensity of use, the temperature and the humidity around the treadmill.
+ Please bear in mind that the noise emission under load is higher than without load.

SAFETY KEY

WARNING

+ For your safety, the device is equipped with an EMERGENCY STOP function. The equipment can only be operated if the safety key is correctly attached to the contact point of the cockpit. If the safety key is no longer on the contact point, the equipment automatically stops. Therefore, the Safety Key cord with the clip must be attached to your clothing before every training session. If you want to quickly stop the treadmill, if you can no longer control the speed, or if another emergency occurs, remove the safety key from the cockpit using the cord.
+ To enable the safety key to detach from the contact point of the cockpit in the event of a fall, the safety key clip must be firmly attached to your clothing!
+ Make sure that the safety key is not accessible to children.

3.1 Console Display

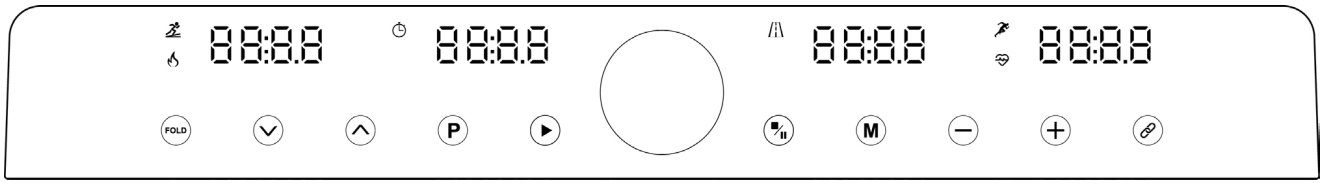

Symbol	Name	Function
	Incline	Displays the current incline.

	Calories	Displays the current burned calories.
	Time	Displays the current training time.
	Distance	Displays the current distance.
	Speed	Displays the current speed.
	Pulse	Displays the current pulse. ⚠ **WARNING** Your fitness equipment is not a medical device. The heart rate measurement of this device may be inaccurate. Various factors can affect the accuracy of the heart rate display. The heart rate display is intended solely as a training aid.

3.2 Button Function

Symbol	Name	Function
FOLD	Fold	Before folding the treadmill, press "Fold" to move it to the maximum incline position. This increases stability.
	Incline -	To decrease the incline, press this button.
	Incline +	To increase the incline, press this button.
P	Programme	To select between 36 preset programs, 3 custom programs, and a body fat analysis, press this button.

▶	Start	To start the treadmill and begin your workout, press this button.
■/II	Stop/Pause	To stop or pause the treadmill and your workout, press this button.
M	Mode	To select between workout time, distance, and calories, press this button.
—	Speed -	To decrease the speed, press this button.
+	Speed +	To increase the speed, press this button.
🔗	Wireless Connection	To establish a wireless connection with your mobile phone, press this button.
○	Knob	+ To start the treadmill in standby mode, press the rotary knob. + To change the speed during training, turn the rotary knob clockwise to increase the speed and counterclockwise to decrease it. + To stop or pause the treadmill during training, press the rotary knob. + To select training values, turn the knob and press to confirm.

ⓘ **NOTICE**
Use the USB-C port to charge your mobile phone or tablet.

3.3 Programme Mode

You have a total of 42 programmes available, of which 36 are preset programmes.

How to start a preset programme:

1. When in standby mode, press P.

The console will display the available programs.

2. Press P to scroll through the programs.
3. To select a program, press START or the dial.
4. To set the time, press Speed + or Speed -or use the dial.
5. To start the program, press START or the dial.

ⓘ **NOTICE**

+ Each program is divided into 10 intervals.
+ When a new interval starts, the program beeps three times.

6. To adjust speed or incline during the workout, press the "+/-" buttons.
7. To pause the workout, press STOP/PAUSE.

7.1. To resume the workout, press START.

8. To end the workout, press STOP/PAUSE again.

When the program is finished, the treadmill will stop automatically.

3.4 Target Programme

Three target programmes are available. In these programmes, you can set one or more target values that count down during training.

To start a target programme:

1. Press MODE to select between time, distance, and calories.
2. Press the +/- buttons or use the dial to set the target value.
3. To start the program, press START or the dial.
4. To adjust the speed or incline during training, press the +/- buttons.
5. To pause the training session, press STOP/PAUSE.

5.1. To resume the training session, press START.

6. To end the training session, press STOP/PAUSE again.

When the set target value is reached, the training session ends automatically.

3.5 Programme overview

PROG. \ TIME		TIME INTERVAL= setting time/10									
		1	2	3	4	5	6	7	8	9	10
P1	SPEED	2	4	3	4	3	5	4	2	5	3
	INCLINE	1	2	3	3	1	2	2	3	2	2
P2	SPEED	2	6	7	8	3	6	8	7	5	2
	INCLINE	1	2	3	3	2	2	3	4	2	2
P3	SPEED	3	8	3	8	5	9	5	9	12	6
	INCLINE	1	3	5	7	9	10	8	6	5	2
P4	SPEED	8	10	11	12	12	11	10	10	9	8
	INCLINE	1	2	2	3	1	2	2	2	2	1
P5	SPEED	6	10	12	9	11	8	12	7	9	3
	INCLINE	1	2	4	3	2	2	4	5	2	1
P6	SPEED	2	8	6	10	10	9	11	8	5	3
	INCLINE	2	2	3	2	3	4	5	6	5	3
P7	SPEED	2	6	7	9	7	9	6	5	4	2
	INCLINE	4	5	6	6	9	9	10	12	6	3
P8	SPEED	2	4	6	8	7	8	9	6	4	2
	INCLINE	3	5	4	4	3	4	4	3	3	2
P9	SPEED	2	4	5	7	6	5	8	6	3	2
	INCLINE	3	5	3	4	2	3	4	2	3	2
P10	SPEED	2	3	5	3	3	5	3	6	3	3
	INCLINE	4	4	3	6	7	8	8	6	3	3
P11	SPEED	2	5	8	10	6	9	5	3	2	2
	INCLINE	1	3	5	8	10	7	6	3	2	3
P12	SPEED	2	5	5	4	4	6	4	2	3	4
	INCLINE	3	5	6	7	12	9	11	11	6	3
P13	SPEED	2	7	4	7	8	9	4	5	3	2
	INCLINE	5	6	6	4	6	5	8	9	4	2

P14	SPEED	2	6	5	4	8	6	5	2	3	3
	INCLINE	5	6	5	8	4	5	5	10	6	3
P15	SPEED	2	6	5	4	8	7	5	3	3	2
	INCLINE	3	4	5	6	3	5	5	6	4	3
P16	SPEED	2	5	7	5	8	6	5	2	4	2
	INCLINE	1	5	6	8	12	9	10	9	5	3
P17	SPEED	2	5	6	7	8	9	8	5	3	4
	INCLINE	3	5	6	8	6	5	8	7	5	3
P18	SPEED	2	3	5	6	8	6	9	6	5	2
	INCLINE	5	7	5	8	6	5	9	10	6	2
P19	SPEED	3	7	6	5	9	7	6	3	5	2
	INCLINE	3	5	6	8	5	6	5	12	8	3
P20	SPEED	3	7	9	10	11	12	10	8	5	2
	INCLINE	2	5	6	7	6	5	8	6	3	2
P21	SPEED	3	6	8	7	9	10	5	8	3	2
	INCLINE	3	6	8	9	9	6	8	10	6	3
P22	SPEED	3	5	8	6	9	10	8	12	6	3
	INCLINE	2	6	8	10	12	10	12	8	5	2
P23	SPEED	3	5	9	11	12	8	6	5	3	2
	INCLINE	2	6	8	10	9	7	8	10	6	3
P24	SPEED	3	8	10	11	12	10	10	8	5	3
	INCLINE	3	6	8	9	10	12	9	6	3	2
P25	SPEED	2	3	3	4	5	4	4	5	2	3
	INCLINE	1	3	1	2	2	2	3	2	3	2
P26	SPEED	2	7	3	8	5	6	8	6	7	2
	INCLINE	1	3	2	3	2	2	3	2	4	2
P27	SPEED	3	3	5	5	12	8	8	9	9	6
	INCLINE	1	5	9	8	5	3	7	10	6	2
P28	SPEED	8	11	12	10	9	10	12	11	10	8
	INCLINE	1	2	1	2	2	2	3	2	2	1
P29	SPEED	6	12	11	12	9	10	9	8	7	3
	INCLINE	1	4	2	4	2	2	3	2	5	1
P30	SPEED	2	6	10	11	5	8	10	9	8	3
	INCLINE	2	3	3	5	5	2	2	4	6	3

P31	SPEED	2	7	7	6	4	6	9	9	5	2
	INCLINE	4	6	9	10	6	5	6	9	12	3
P32	SPEED	2	6	7	9	4	4	8	8	6	2
	INCLINE	3	4	3	4	3	5	4	4	3	2
P33	SPEED	2	5	6	8	3	4	7	5	6	2
	INCLINE	3	3	2	4	3	5	4	3	2	2
P34	SPEED	2	5	3	3	3	3	3	5	6	3
	INCLINE	4	3	7	8	3	4	6	8	6	3
P35	SPEED	2	8	6	5	2	5	10	9	3	2
	INCLINE	1	5	10	6	2	3	8	7	3	3
P36	SPEED	2	5	4	4	3	5	4	6	2	4
	INCLINE	3	6	12	11	6	5	7	9	11	3

3.6 Custom Programmes

You have a total of 42 programmes available, of which 3 are custom programmes.

How to start a custom programme:

1. When in standby mode, press P.

The console will display the programs.

2. Turn the dial to scroll through the programs.
3. To select a program, press START or the dial.
4. To set the time, press Speed + or Speed -.
5. To set the time and incline of the segments, press Mode.
6. To adjust the values, press Speed +/- or use the dial for speed and Incline +/- for incline.
7. To start the program, press Start.

ⓘ **NOTICE**

+ Each program is divided into 10 intervals.
+ When a new interval starts, the console beeps three times.

8. To adjust the speed or incline during the workout, press the +/- buttons.
9. To pause the workout, press STOP/PAUSE.

9.1. To resume the workout, press START.

10. To end the workout, press STOP/PAUSE again.

When the program ends, the treadmill stops automatically.

3.7 Body Fat Analysis

A total of 41 programs are available to you, including one body fat analysis program.

► **CAUTION**
Please note that this analysis is not a substitute for a medical diagnosis.

To start a custom program:

1. When in standby mode, press P.
2. Turn the dial to scroll through the programs.

The console will display FAT.

3. To select the program, press the dial.
4. To enter your data, press M.
5. Set the values using Speed +/-.
6. To confirm the values, press M.
7. Hold the hand pulse sensors.

After 3 seconds, the result will be displayed.

Explanation of possible results:

F-1	Gender	01 male	02 female
F-2	Age	10-99	
F-3	Height	100-200CM	
F-4	Weight	20-150KG	
F-5	FAT	⩽19	Under weight
	FAT	=(20---25)	Normal weight
	FAT	=(26---29)	Overweight
	FAT	⩾30	Obesity

ⓘ **NOTE**
Please be aware that this evaluation is based on BMI and is therefore only partially accurate for bodybuilders or very muscular individuals.

3.8 Heart Rate Controlled Training

⚠ **WARNING**

Your fitness equipment is not a medical device. The heart rate measurement of this device may be inaccurate. Various factors can affect the accuracy of the heart rate display. The heart rate display is intended solely as a training aid.

You have a total of 42 programs available, including two heart rate-controlled programs.

The heart rate-controlled training automatically adjusts the speed if your target heart rate is not reached. If the maximum speed is reached and you are still below the target, the incline will automatically increase. If your heart rate is above the target, the incline will decrease.

ⓘ **NOTICE**

You need a Bluetooth chest strap to use the heart rate-controlled program.

1. When in standby mode, press P.
2. Select either programme HP1 or HP2:
   - HP1: Maximum speed of 10 km/h
   - HP2: Maximum speed of 12 km/h

The console will display AG:30.

3. Use the +/- buttons to set your age.

A target heart rate will be suggested.

4. To change the suggested target heart rate, press M.
5. Use the +/- buttons to set the target heart rate.
6. To confirm your selection, press the dial.

The first 60 seconds of training serve as a warm-up period during which the speed will not be adjusted.

7. To pause the workout, press STOP/PAUSE.

7.1. To resume the workout, press START.

8. To end the workout, press STOP/PAUSE again.

When the program ends, the treadmill will stop automatically.

Age	Pulse			Age	Pulse			Age	Pulse		
	Min	Default	Max		Min	Default	Max		Min	Default	Max
15	123	123	195	37	110	110	174	59	97	97	153
16	122	122	194	38	109	109	173	60	96	96	152
17	122	122	193	39	109	109	172	61	95	95	151
18	121	121	192	40	108	108	171	62	95	95	150
19	121	121	191	41	107	107	170	63	94	94	149
20	120	120	190	42	107	107	169	64	94	94	148
21	119	119	189	43	106	106	168	65	93	93	147
22	119	119	188	44	106	106	167	66	92	92	146
23	118	118	187	45	105	105	166	67	92	92	145
24	118	118	186	46	104	104	165	68	91	91	144
25	117	117	185	47	103	103	164	69	91	91	143

26	116	116	184	48	103	103	163	70	90	90	143
27	116	116	183	49	103	103	162	71	89	90	142
28	115	115	182	50	102	102	162	72	89	90	141
29	115	115	181	51	101	101	161	73	88	90	140
30	114	114	181	52	101	101	160	74	88	90	139
31	113	113	180	53	100	100	159	75	87	90	138
32	113	113	179	54	100	100	158	76	86	90	137
33	112	112	178	55	99	99	157	77	86	90	136
34	112	112	177	56	98	98	156	78	85	90	135
35	111	111	176	57	98	98	155	79	85	90	134
36	110	110	175	58	97	97	154	80	84	90	133

Overview of the Different Values in Heart Rate Controlled Training

3.9 Reminder for Treadmill Lubrication

After every 300 kilometres run, a warning beep will sound every 10 seconds. The display will show OIL. Please refer to the chapter 6.4.3 for instructions on treadmill lubrication.

ⓘ **NOTICE**
After lubricating the treadmill in standby mode, press STOP for 3 seconds to silence the warning beep.

3.10 Standby

The device features an energy-saving function.

ⓘ **NOTICE**
- If the device is in standby mode and no button is pressed for 10 minutes, the display will automatically switch off. This activates the energy-saving function.
- To turn the display back on, press any button.

4.1 General Instructions

When training, it is important to perform the exercises correctly in order to avoid injuries and achieve the desired training effect. Make sure you use the correct technique and train at an appropriate intensity level. Always consult an expert such as a trainer or doctor if you are unsure or have health problems. Always start your training with a low load and increase it evenly and gently.
End your training with a cool-down phase. If you have any questions or uncertainties, contact your doctor.

4.1.1 Training clothes

During training, wear appropriate sports clothing that is comfortable and breathable. Avoid clothing that restricts you or is uncomfortable. Make sure that your shoes are suitable and offer you sufficient support. In addition, always carry a towel with you to wipe away sweat and keep the equipment clean.

4.1.2 Warming up and stretching

It is important to warm up and stretch properly before training to avoid injury and improve performance. Stretching helps to loosen muscles and improve flexibility. Be sure to incorporate a short stretching routine before each workout.

Warm-up exercise:

1. Stand upright with your feet about shoulder-width apart.
2. Start with gentle arm circles by slowly moving your arms forwards in small circles in a controlled manner.
3. Perform arm circles backwards to loosen your shoulders and arms.
4. Do squats by slowly squatting down and then straightening up again. Make sure that your knees do not extend beyond your toes.

⚠ **CAUTION**
Do not exercise with sore muscles or take it easy on the affected muscles, as this can lead to injuries.

4.1.3 Medication

If you regularly take medication and want to exercise, it is important to be aware of possible side effects. Ask your doctor whether your medication affects your workout.

4.1.4 Used muscle groups

Rowing uses the following muscle groups:

+ Gluteal muscle
+ Leg muscles

Make sure you keep your back straight during training. Do not hunch over and do not arch your back.

4.1.5 Exercise frequency

Regular exercise is crucial to making progress and staying healthy in the long term. Continuous exercise can strengthen muscles, improve endurance and enhance overall well-being. Remember that even small workouts can be done regularly to achieve long-term results.

Training with heart rate orientation
Heart rate orientation guarantees an extremely effective and healthy training. Through your age and the following table, you can quickly and easily read and determine the optimal pulse for your training. An acoustic alarm will sound if your heart rate exceeds the set target heart rate. Which target heart rate is important for which training goal can be found out in the following.

Fat burning (weight management): The main goal here is to burn deposits of fat. In order to achieve this training goal, a low training intensity (approximately 55% of the maximum heart rate) and a longer training period are required.

Cardiovascular training (cardio training): The primary goal is to increase stamina and fitness through an improved provision of oxygen through the cardiovascular system. In order to achieve this training goal, medium intensity (approximately 75% of the maximum heart rate) with a medium training period is required.

Anaerobic (maximum) load training: The main goal of maximum load training is to improve recovery after short, intense loads in order to be able to quickly return to the aerobic zone. In order to achieve this training goal, a high intensity (approximately 90% of the maximum heart rate) with short, intense load is required, which is followed by a recovery phase in order to prevent muscle fatigue.

Example:
For a 45-year-old man, the maximum heart rate is 175 (220 - 45 = 175).

+ The fat burning target zone (55%) is at approximately 96 beats/min. = (220 - age) x 0.55.
+ The cardio target zone (75%) is at approximately 131 beats/min. = (220 - age) x 0.75.
+ The maximum heart rate for an anaerobic load training (90%) is at approximately 157 beats/min. = (220 - age) x 0.9.

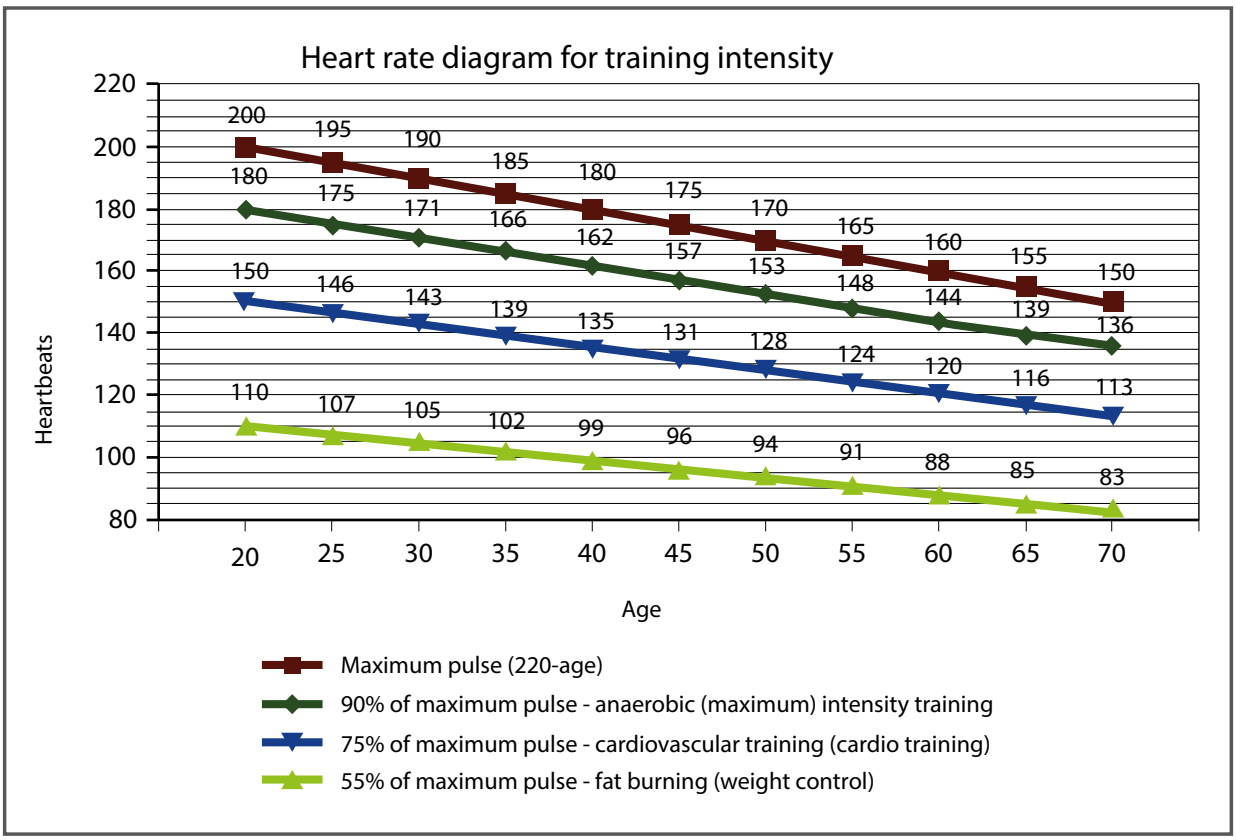

4.2 Workout journal

(Copy template)

Date | Distance | Time (min.) | Resistance level | Training weight | Ø Pulse | Calories burnt | I feel ... | Body weight

4.3 Wireless Connection and Fitness Apps

This console is equipped with a wireless interface. Please take note that your mobile device needs to be compatible with the wireless interface of the treadmill.

To use training apps you will have to activate the wireless connection function on your mobile device (tablet or smart phone) and start the fitness app. Select your fitness equipment. Please follow the instructions given in the app. You will find the name of your fitness euqipment on a small sticker on the back of the console.

You will find the fitness apps in the app stores of Google or Apple. There you will find the apps "Kinomap" or "Zwift". Please note that these apps are produced by an external manufacturer. Fitshop does not take any responsibility regarding the availability, functionality or contents of these programmes.

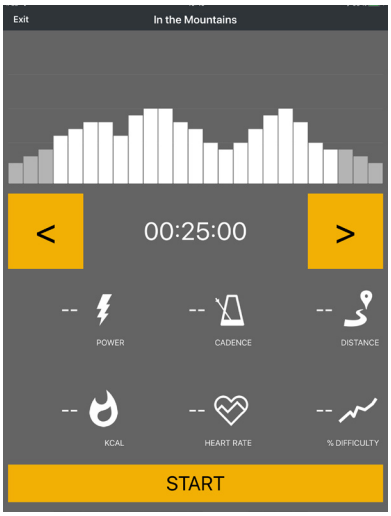

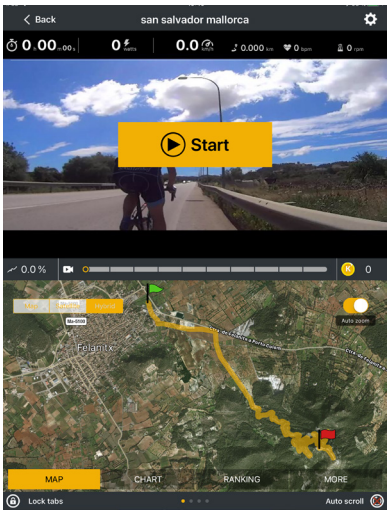

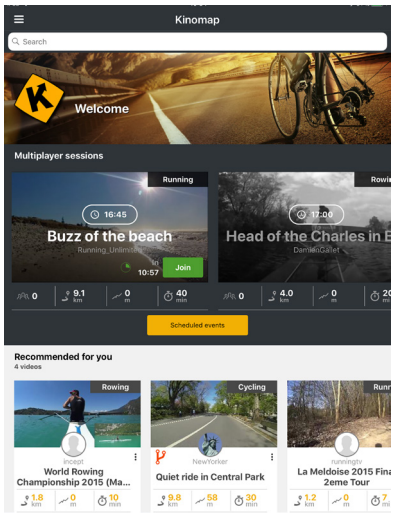

Example: Kinomap

5.1 General Instructions

⚠ **WARNING**

+ The storage location should be chosen so that improper use by third parties or children can be prevented.
+ If your equipment does not have transportation wheels, the equipment must be disassembled before transportation.

► **ATTENTION**

+ Make sure that the equipment is protected from moisture, dust and dirt in the selected storage location. The storage location should be dry and well ventilated and have a constant ambient temperature between 10°C and 35°C.

5.2 Transportation Wheels

► **ATTENTION**

If you want to transport your equipment over particularly sensitive and soft floor coverings, such as parquet, planks or laminate, lay out the transport route with cardboard or similar to avoid possible floor damage.

1. Stand behind the equipment and lift it until the weight is transferred to the transportation wheels. After that, you easily can move the equipment to a new position. For long transport distances the equipment should be disassembled and safely packed.
2. Select the new location by following the instructions in the section 1.4 of this manual.

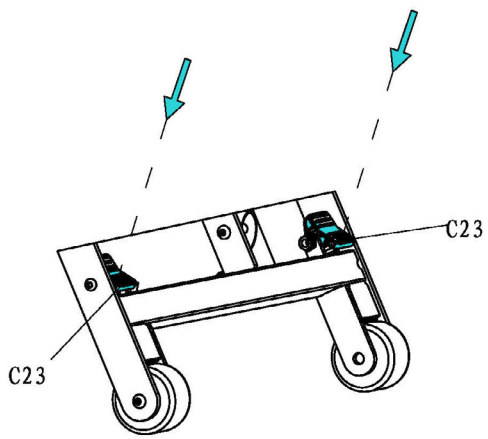

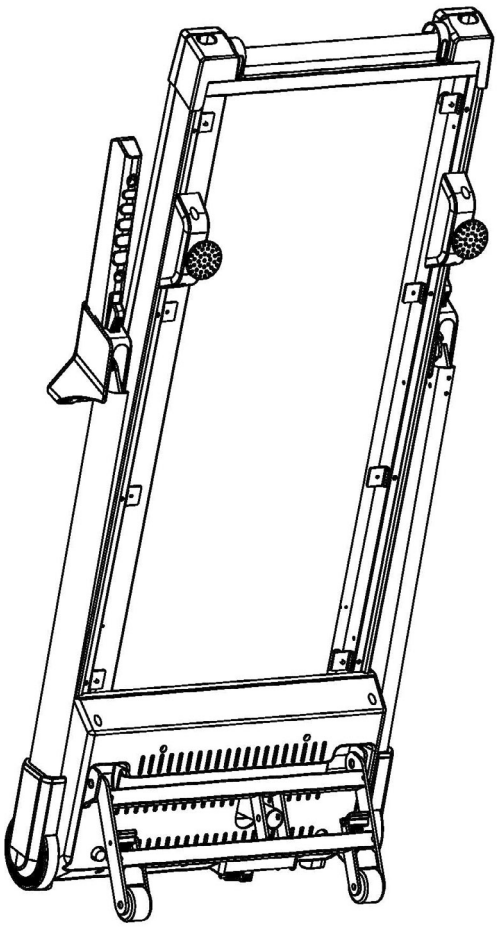

5.3 Folding Mechanism

The treadmill is foldable and thus saves space when it is stored. It also makes it easier to transport.

5.3.1 Folding Up the Treadmill

⚠ **WARNING**

+ Do not connect the equipment to the power supply when it is folded up. Try not to operate the equipment when it is folded up.
+ The running surface must have come to a complete stop before folding.

⚠ **CAUTION**

+ Do not lean on the equipment when it is folded up and do not place anything on top of it that may make the equipment unstable or fall down.

► **ATTENTION**

+ Make sure that nothing is standing next to or on top of the treadmill that can be spilled or thrown or that makes it impossible to fold the treadmill.

1. Press "Fold" on the console.

Wait until the incline is at its maximum.

2. Press the toggle switches on the console arms.
3. Fold the console upward.
4. Move the console arms toward the treadmill.
5. Stand behind the treadmill and tilt the treadmill forward to fold it up if necessary.
6. Turn off the on/off switch and remove the plug from the outlet.

5.3.2 Unfolding the Treadmill

► **ATTENTION**

+ Make sure that nothing is standing next to or on top of the treadmill that can be spilled or thrown or that makes it impossible to unfold the treadmill.

⚠ **CAUTION**

+ Do not connect the equipment to the power supply when it is folded up because the equipment automatically adjusts the incline to the lowest position, causing it to become unstable or fall down.

1. Fold the treadmill downward.
2. Move the console arms upward.
3. Press the toggle switches on the console arms.
4. Fold the console downward.
5. Turn on the on/off switch and plug the plug into the outlet.

Wait until the incline is at its minimum.

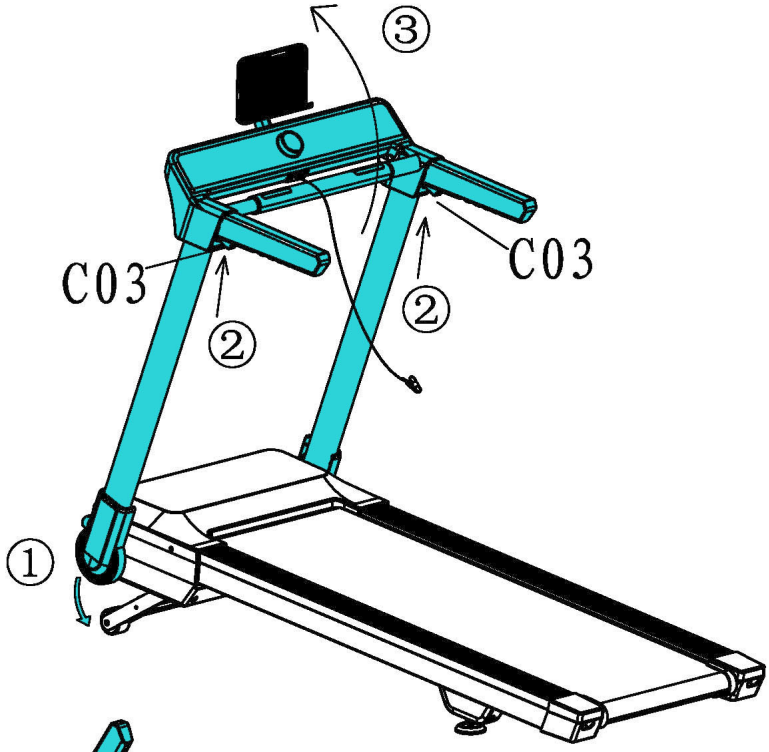
③
C03
C03
②
②
①

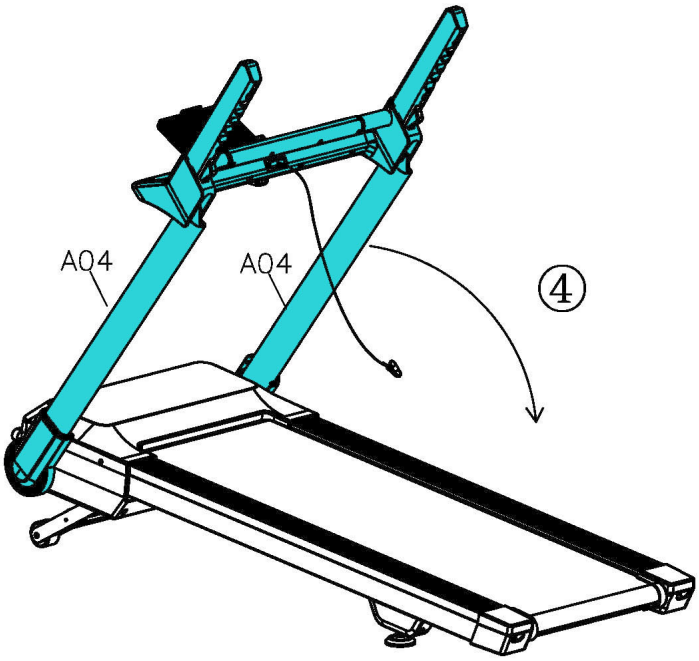
A04
A04
④

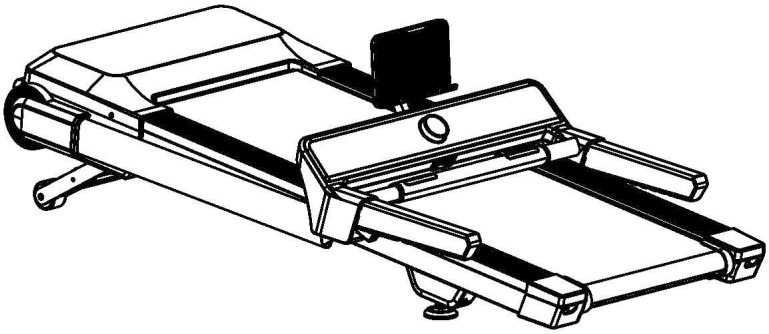

6.1 General Instructions

⚠ **WARNING**

+ Do not make any improper changes to the equipment.

⚠ **CAUTION**

+ Damaged or worn components may affect your safety and the life of the equipment. Therefore, immediately replace damaged or worn components. In such a case, contact the contract partner. The equipment must not be used until it has been repaired. If necessary, use only original spare parts.

► **ATTENTION**

+ In addition to the instructions and recommendations for maintenance and care given here, additional service and/or repair work may be necessary; this must only be carried out by authorised service technicians.

6.2 Faults and Fault Diagnosis

The equipment undergoes regular quality controls during production. Nevertheless, faults or malfunctions may occur. Frequently, individual parts are responsible for these disturbances, an exchange is usually sufficient. Please refer to the following overview for the most common errors and how to correct them. If the equipment still does not function properly, contact your contract partner.

Fault	Cause	Solution
Console is not responding	Safety key missing or not inserted correctly	Check whether Safety Key is inserted and insert if necessary
Running mat slanting Grinding noises	Running mat not centered	Adjust the running mat according to the instructions
Running mat slips through/stops	Tape tension/lubrication not correct	Check belt tension/lubrication according to instructions
Display is blank/is not working	+ Interrupted power connection + Loose cabel connections	+ Power switch to on + Check whether Safety Key is plugged in + Check cable connections
No pulse display	+ Sources of interference in the room + unsuitable chest strap + Wrong position of chest strap + Chest strap defective or battery empty + Pulse display defective	+ Eliminate sources of interference (e.g. mobile phone, WLAN, lawn mower and vacuum cleaner robot, etc. ...) + Use a suitable chest strap (see RECOMMENDED ACCESSORIES). + Reposition chest strap and/or moisten electrodes + Changing batteries + Check if pulse display by hand pulse possible

6.3 Error Codes and Troubleshooting

The electronics of the equipment continuously carries out tests. In case of deviations, an error code appears on the display and normal operation is stopped for your safety.

E01: Please contact customer service.
E02: Please contact customer service.
E03: Please contact customer service.
E04: Please contact customer service.
E05: Please contact customer service.
E06: Check if the power supply is sufficient. If necessary, contact technical support.

Please contact the contract partner for technical support.

6.4 Care and Maintenance

The most important maintenance measure is the care of the running mat. This includes adjustment, re tensioning and lubrication of the running mat. Damage resulting from insufficient or neglected care is not covered by the warranty. You should therefore carry out maintenance checks at regular intervals. Be very careful when adjusting and tightening the running mat, as a strong over voltage or under voltage can cause damage to the equipment. The running mat is adjusted at the factory according to the regulations before delivery. However, it may happen that the running mat slips during transport.

By scanning the QR-code with the camera function or QR-code scanner app of your smartphone/tablet, a video on general maintenance of a treadmill opens on YouTube. The video serves to illustrate the maintenance points described in this manual.

Please note that the video may not be available in your language or with appropriate subtitles.

If you cannot scan QR-codes, you can access all Fitshop videos on YouTube by first opening YouTube and entering "Fitshop" in the search field.

6.4.1 Adjusting the Running Mat

During training, the running mat should run as centrally and straight as possible. The alignment of the running mat can change depending on the stress and load. Another reason can be the positioning of the equipment on an uneven surface.

⚠ **CAUTION**
During the following maintenance nobody must be on the treadmill!

1. Let the treadmill run at a speed of 5 km/h.
2. If the running mat deviates to the left, turn the left adjusting screw at the rear end of the device max. one ¼ turn clockwise and the right adjusting screw max. one ¼ turn anticlockwise.
3. If the running mat deviates to the right, turn the right adjusting screw at the rear end of the device max. ¼ turn clockwise and the left adjusting screw max. ¼ turn anticlockwise.
4. Then observe the mat for about 30 seconds, as the change is not immediately visible.
5. Repeat this procedure until the running mat is straight again. If the running mat cannot be adjusted, please contact your contract partner.

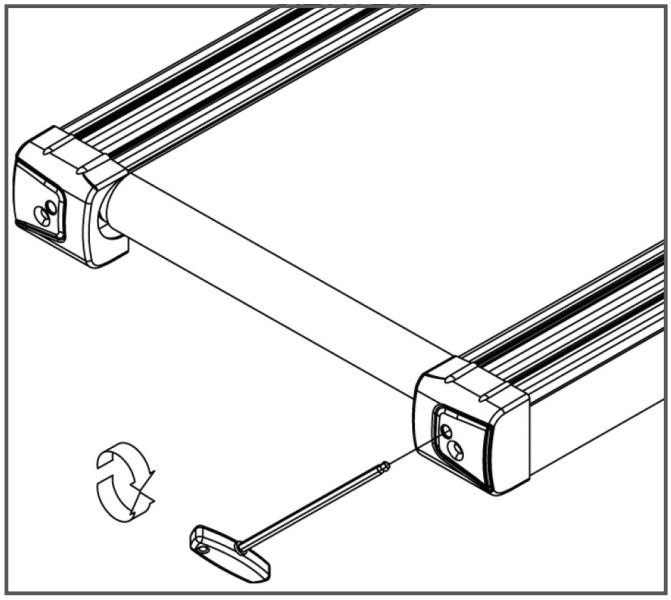

6.4.2 Re-tensioning the Running Mat

If the running mat slips over the rollers during operation (if this is the case, there is a noticeable jerk during running), the running mat must be re tightened.

In most cases, the slipping is caused by stretching of the mat through use. This is perfectly normal.

ⓘ **NOTICE**
Re-tensioning is carried out using the same adjusting screws that are used for adjustment.

1. Let the treadmill run at a speed of 5km/h.
2. Turn the left and right adjusting screws directly one after the other, max. one ¼ turn clockwise.
3. Then check whether the running mat continues to slip. If this is the case, you must perform the described procedure again.

6.4.3 Lubricating the Running Mat

If the running mat is not sufficiently lubricated, friction increases significantly and this leads to heavy wear of the endless belt, running plate, motor and circuit board. If you feel an increased friction of the running mat, this is an indication that you should lubricate the mat. However, lubrication should be carried out at least every 3 months or every 50 operating hours. Whichever case comes first.

ⓘ **NOTICE**
If your treadmill is equipped with a folding mechanism, you can also lubricate it when it is folded.

1. Raise the running mat slightly.
2. Apply some silicone oil or silicone spray to the entire deck and distribute evenly.
3. Continue turning the belt by hand so that the entire surface between the endless belt and the running plate is lubricated.
4. Wipe off the excess silicone oil or silicone spray.

ⓘ **NOTICE**
This maintenance must also be carried out after prolonged non-use of the equipment.

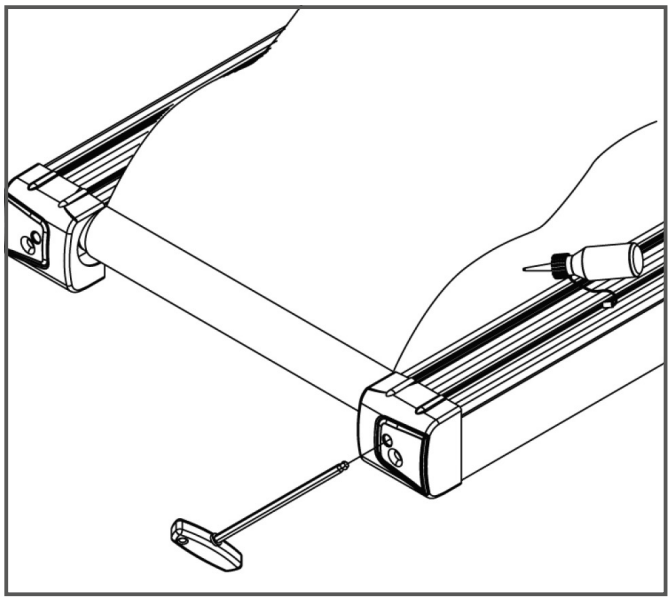

6.5 Maintenance and Inspection Calendar

To avoid damage from body sweat, the equipment must be cleaned with a damp towel (no solvents!) after each training session.

The following routine tasks must be performed at the specified intervals:

Part	Weekly	Monthly	Quarterly
Display console	C	I	
Tension of the running mat			I
Lubrication of the running mat			I
Plastic covers	C	I	
Screws and cable connections			I
Legend: C = clean; I = inspect			

By scanning the QR-code with the camera function or QR-code scanner app of your smartphone/tablet, a video on general maintenance of a treadmill opens on YouTube. The video serves to illustrate the maintenance points described in this manual.

Please note that the video may not be available in your language or with appropriate subtitles.

If you cannot scan QR-codes, you can access all Fitshop videos on YouTube by first opening YouTube and entering "Fitshop" in the search field.

7 DISPOSAL

At the end of its operational life, this equipment cannot be disposed of in normal household waste. Instead, it must be disposed of via an electricals recycling centre. Further information can be obtained from your local authority's recycling service.

The materials can be recycled as per their symbols. Through the reuse, recycling of materials or other forms of recovery of old equipment, you make an important contribution to the protection of the environment.

8 RECOMMENDED ACCESSORIES

To make your training experience even more efficient and pleasant, we recommend that you add suiting accessories to your fitness equipment. For elliptical cross trainers this could for example be a **floor mat**, which makes your fitness equipment stand more securely and also protects the floor from sweat or **silicone spray** to keep moving parts in good shape.

If you have purchased a fitness machine with pulse training and want to train your heart rate, we strongly recommend that you use a compatible **chest strap**, as this ensures optimum transmission of the heart rate.

Our range of accessories offers the highest quality and makes training even better. If you would like to find out more about compatible accessories, please go to the detail page of the product in our webshop (the easiest way is to enter the article number in the search field above) and go to the recommended accessories on this page. Of course, you can also contact our customer service: by telephone, e-mail, in one of our branches or via our social media channels. We will be happy to advise you!

floor mat

chest strap

lubricant

handrails

9.1 Serial Number and Model Name

In order to provide you with the best possible service, please have the model name, article number, serial number, exploded drawing and parts list ready. The corresponding contact options can be found in chapter 11 of this operating manual.

ⓘ **NOTICE**
The serial number of your equipment is unique. It's located on a white sticker. The exact position of this sticker is shown in the following illustration.

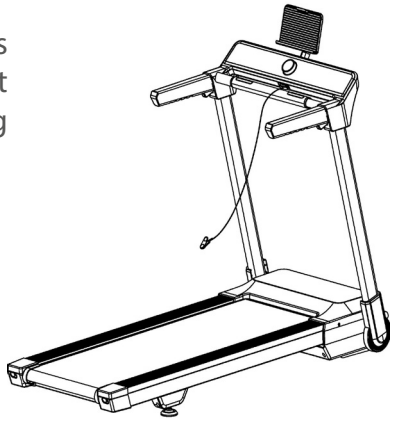

Enter the serial number in the appropriate field.

Serial number:

Brand / Category:

BodyMax / treadmill

Model Name:

TR200

SKU:

BM-TR200

9.2 Parts List

No.	Name	Specification	BOM no.	Qty.
A01	Main frame		3.11245B.200.001.000	1
A02	Incline bracket		3.11145B.300.001.000	1
A03	Console bracket		3.11245B.320.001.000	1
A04	Folding rotating tube bracket		3.11245B.380.002.000	1
A05	handrail bracket		3.11245B.320.002.000	1
A06	Folding handle bar		1.02.11245B.3224.000	1
A07	IPAD holder bracket		3.11145B.400.001.000	1
A08	Front foot pad support bracket		3.11145B.400.002.000	2
A09	Right balancing bracket		3.11145B.200.002.000	1
A10	Left balancing bracket		3.11145B.200.003.000	1
A11	Left upright tube		3.11245B.380.003.000	1
A12	Right upright tube		3.11245B.380.004.000	1
B01	Front roller		1.03.02.00.11145B.505	1
B02	Back roller		1.03.03.00.10946A.505	1
B03	Turning point support		1.03.23.00.000021.820	1
B04	Cylinder		1.03.01.00.11145B.509	1
B05	Spring pin shaft		1.03.06.00.000135.505	2
B06	Tablet telescopic rod		1.03.99.00.000281.508	2
B07	Spacer pin		1.03.10.00.000042.505	2
B08	Steel wire assemblies 1		1.03.99.00.000335.505	1
B09	Steel wire assemblies 2		1.03.99.00.000336.505	1
B10	Handle pull spring		1.03.12.00.000062.505	2
B11	Step sleeve		1.03.05.00.000191.505	2
B12	Telescopic rod compression spring		1.03.12.00.000065.000	2
B13	Brake spring		1.03.12.00.000066.000	2
B14	Button spring		1.03.12.00.000068.000	1
B15	Rotating gasket		1.03.99.00.000284.000	2
B16	Compression spring		1.03.12.00.000019.505	2
B17	Pressing seat		1.03.99.00.000272.000	2
B18	Bushing		1.03.05.00.000054.505	2

B19	5# Allen wrench		1.03.13.04.000001.505	1
B20	Saucer washer		1.03.99.00.000190.501	2
B21	Safety key spring plate		1.03.99.00.000270.505	1
B22	Hand pulse plate		1.03.99.00.000063.000	4
B23	Magnet		1.03.99.00.000248.502	1
B24	Side rail fixed plate		1.02.13451A.2024.505	8
B25	Open-end wrench		1.03.13.01.000008.505	1
B26	Snap knob		1.03.99.00.000290.512	2
B27	Bearing		1.03.07.00.000020.000	2
C01	Console top cover		1.05.02.02.11245B.000	1
C02	Console bottom cover		1.05.02.03.11245B.000	1
C03	Handle cover		1.05.99.00.001445.000	2
C04	Handle bar		1.05.11.02.11245B.000	2
C05	Left/right tube cover		1.05.04.99.11245B.000	2
C06	Motor top cover		1.05.03.01.11245B.000	1
C07	IPAD holder top cover		1.05.99.00.001204.000	1
C08	IPAD holder bottom cover		1.05.99.00.001205.000	1
C09	Oval plug		1.05.01.02.000123.000	2
C10	Spin axis sleeve		1.05.01.01.000023.000	2
C11	Square pad		1.05.99.00.001206.000	2
C12	Raster plate		1.05.99.00.001356.000	4
C13	Knob cover		1.05.99.00.001208.000	1
C14	Knob button		1.05.99.00.001209.000	1
C15	Foam		1.05.01.05.36301K.401	2
C16	Handrail top cover		1.05.99.00.000307.000	1
C17	Handrail bottom cover		1.05.99.00.000308.000	1
C18	Rear foot pad cover		1.05.01.13.000057.000	2
C19	Motor bottom cover		1.05.03.02.11145B.000	1
C20	Left back end cover		1.05.04.01.11145B.000	1
C21	Right back end cover		1.05.04.02.11145B.000	1
C22	Brake spindle		1.05.99.00.001214.000	2
C23	Brake pedal		1.05.99.00.001215.000	2
C24	Brake seat		1.05.01.14.000023.000	2
C25	Front foot pad		1.05.01.12.000058.000	2

C26	Tablet Holder mat		1.05.99.00.001217.000	1
C27	Spin axis pressing seat		1.05.99.00.001218.401	1
C28	Brake pad		1.05.99.00.001219.401	2
C29	Top side rail		1.05.06.00.000229.000	2
C30	Lower positioning soft pad		1.05.99.00.001220.000	1
C31	Cushion		1.05.01.06.000084.401	2
C32	Black cushion		1.05.01.06.000085.401	8
C33	EVA pad		1.05.99.00.000115.401	4
C34	Running belt		1.05.05.00.11145B.401	1
C35	IPAD holder clip		1.05.99.00.001138.000	1
C36	Rubber pad		1.05.99.00.001317.401	2
C37	Fixed base		1.05.99.00.001158.000	2
C38	Motor belt		1.05.07.00.J16065.401	1
C39	Side rail tension seat		1.05.99.00.000518.401	6
C40	Moving wheel		1.05.01.10.000032.401	2
C41	Plastic pad		1.05.99.00.000002.401	2
C42	Tube foot cover		1.05.99.00.000785.401	2
C43	Universal foot pad set 2		1.05.01.12.000011.401	2
C44	EVA pad		1.05.99.00.000663.401	2
C45	Hanging board soft pad		1.05.99.00.001272.000	1
C46	Shock-absorbing pad		1.05.99.00.001278.000	4
C47	Corrugated pipe		7.09.03.01.000164.000	1
C48	EVA pad		1.05.99.00.001287.401	2
C49	Pearl cotton sleeve		1.07.99.00.000014.000	2
C50	Safety lock marbles		1.05.99.00.001128.419	1
C51	Safety key		1.05.99.00.001061.418	1
C52	Safety key clip		1.05.99.00.000600.403	1
C53	Light-sensing bracket		1.05.99.00.001352.401	1
D01	Nut	M4	1.04.01.03.040000.512	2
D02	Nut	M10	1.04.01.03.100000.512	6
D03	Nut	M8	1.04.01.03.080000.512	6
D04	Nut	M6	1.04.01.03.060000.512	13
D05	Bolt	M10*65	1.04.02.01.106503.512	2
D06	Bolt	M10*65	1.04.02.01.106563.512A	1

D07	Bolt	M10*45	1.04.02.01.104563.512	1
D08	Bolt	M10*30	1.04.02.01.103062.512	2
D09	Bolt	M8*32	1.04.02.01.083262.512	2
D10	Bolt	M8*20	1.04.02.01.082020.512	10
D11	Bolt	M8*15	1.04.02.01.081500.512LA	10
D12	Bolt	M6*65	1.04.02.01.066503.512	2
D13	Screw	ST4.2*12	1.04.02.09.4A1200.512	7
D14	Bolt	M3*10	1.04.02.09.031000.512	2
D15	Screw	ST2.9*8	1.04.02.09.2A0800.512	8
D16	Screw	ST4.2*15	1.04.02.09.4A1500.501	2
D17	Bolt	M10*20	1.04.02.01.102010.512LA	2
D18	Bolt	M5*15	1.04.02.04.051590.512	8
D19	Bolt	M5*12	1.04.02.04.051290.502	6
D20	Bolt	M4*20	1.04.02.04.042000.502	4
D21	Screw	ST2.0*8	1.04.02.06.4A1290.512	19
D22	Screw	ST4.2*12	1.04.02.05.020800.502	8
D23	Screw	ST4.2*12	1.04.02.05.4A1290.512	2
D24	Screw	ST4.2*12	1.04.02.05.4A1200.512	22
D25	Screw	ST2.9*8	1.04.02.05.2A0800.512	2
D26	Screw	ST2.9*6.0	1.04.02.05.2A0600.512	12
D27	Screw	ST2.5*8	1.04.02.05.2B0890.512	2
D28	Bolt	M6*20	1.04.02.02.062000.512	4
D29	Bolt	M6*60	1.04.02.02.066000.512	1
D30	Bolt	M6*55	1.04.02.02.065500.512	2
D31	Bolt	M8*15	1.04.02.02.081500.512	2
D32	Bolt	M6*58	1.04.02.02.065803.512	8
D33	Bolt	M6*20	1.04.02.03.062000.512	8
D34	Locked washer	10	1.04.03.01.100000.512	4
D35	Locked washer	8	1.04.03.01.080000.512	2
D36	Locked washer	6	1.04.03.01.060000.502	5
D37	Spring washer	8	1.04.03.02.080000.512	10
D38	Spring washer	5	1.04.03.02.050000.502	2
D39	Big washer	φ10*φ26*2.0	1.04.03.04.102620.512	4
D40	Flat washer	8	1.04.03.03.080000.512	10

D41	Flat washer	6	1.04.03.03.060000.512	8
D42	Flat washer	10	1.04.03.03.100000.512	2
D43	Locked washer	5	1.04.03.01.050000.502	2
D44	Bolt	M4*10	1.04.02.04.041000.502	2
D45	Screw	ST4.2*25	1.04.02.05.4A2500.512	4
D46	Bolt	M5*10	1.04.02.04.051090.502	2
D47	Nut	M10	1.04.01.04.100500.512	2
D48	Nut	M8	1.04.02.03.080800.512	2
E01	Running board		1.05.99.00.11145B.401	1
E02	DC motor		1.06.06.01.454007.702	1
E03	Incline motor		1.06.06.03.175500.721	1
E04	Square switch button		1.06.01.01.000002.401	1
E05	Overload protector		1.06.99.04.000002.008	1
E06	Power socket		1.06.99.99.000001.000	1
E07	Magnet ring		1.06.99.02.000001.401	1
E08	Magnet core		1.06.99.01.000001.401	1
E09	AC single wire		1.06.05.02.120020.402	1
E10	AC single wire		1.06.05.02.135020.402	2
E11	AC single wire		1.06.05.02.135020.406	2
E12	Grounding wire		1.06.05.04.135050.413	1
E13	Power wire		1.06.05.01.3B05B6.101	1
E14	Console		1.06.02.03.11245B.000	1
E15	Control board		1.06.03.01.11245B.000	1
E16	Console top signal wire		1.06.04.01.3A6030.000	1
E17	Console bottom signal wire		1.06.04.03.360040.000	1
E18	Safety switch connecting wire		1.06.04.12.2150E1.000	1
E19	Induction switch board		1.06.01.99.000020.000	1
E20	Speed sensor		1.06.04.99.350020.000	1
E21	type-c board		1.06.07.07.000343.000	1
E22	type-c wire		1.06.04.99.2150G0.000	1
E23	Hand pulse top wire		1.06.04.99.220038.000	2
E24	Hand pulse bottom wire		1.06.04.99.435047.000	2
F01	Filter		1.06.99.08.000018.010	1
F02	Inductance		1.06.99.07.000014.010	1

F03	AC single wire	ST4.2*12	1.06.05.02.135020.406	1
F04	Grounding wire		1.06.05.04.135050.413	1
F05	Screw	ST4.2*12	1.04.02.06.4A1290.512	4
C	Console set		1.06.02.03.11245B.001	
E	Console set with handlebar		1.06.02.03.11245B.002	
B	IPAD holder set		3.11145B.400.001.001	

9.3 Exploded Drawing

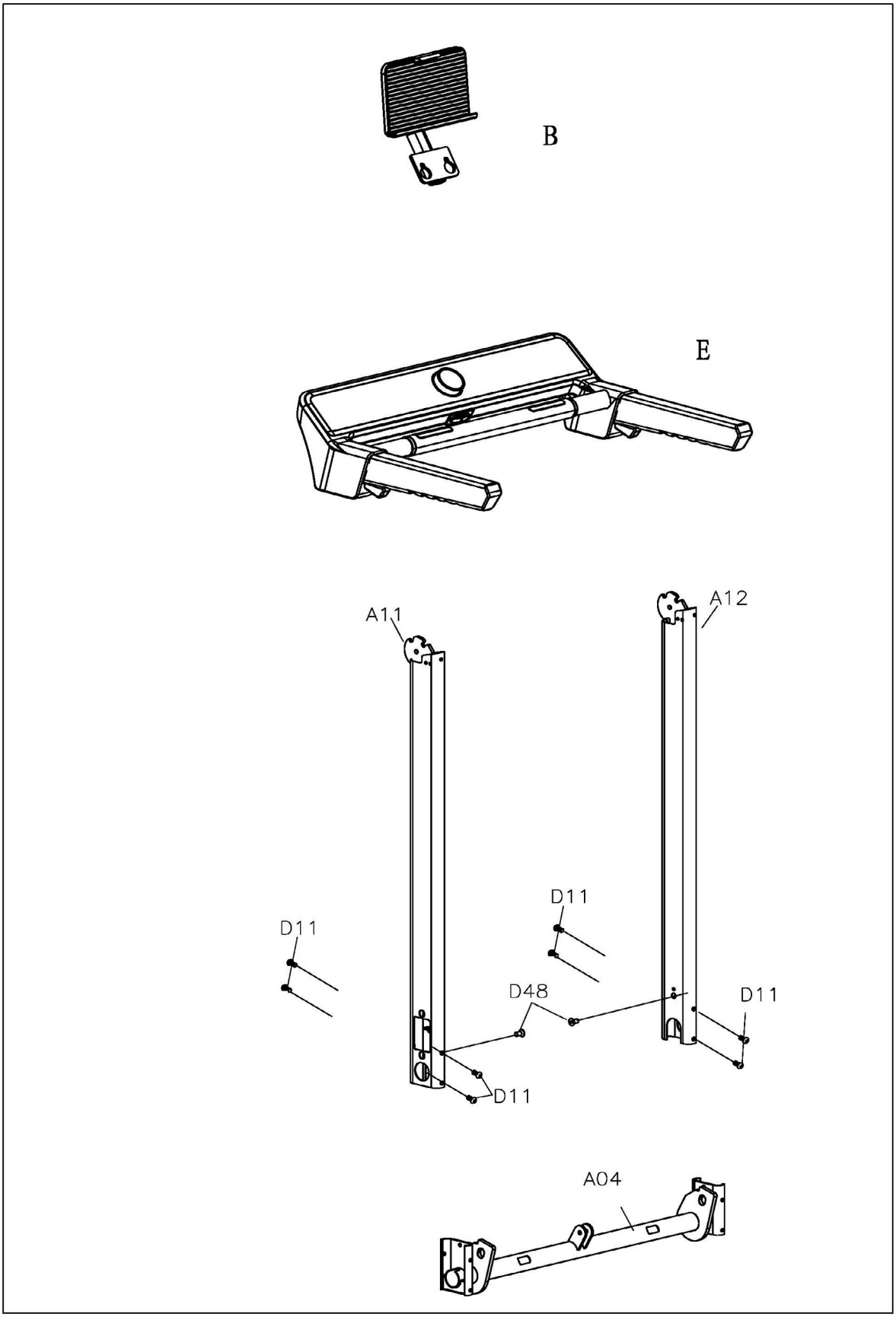

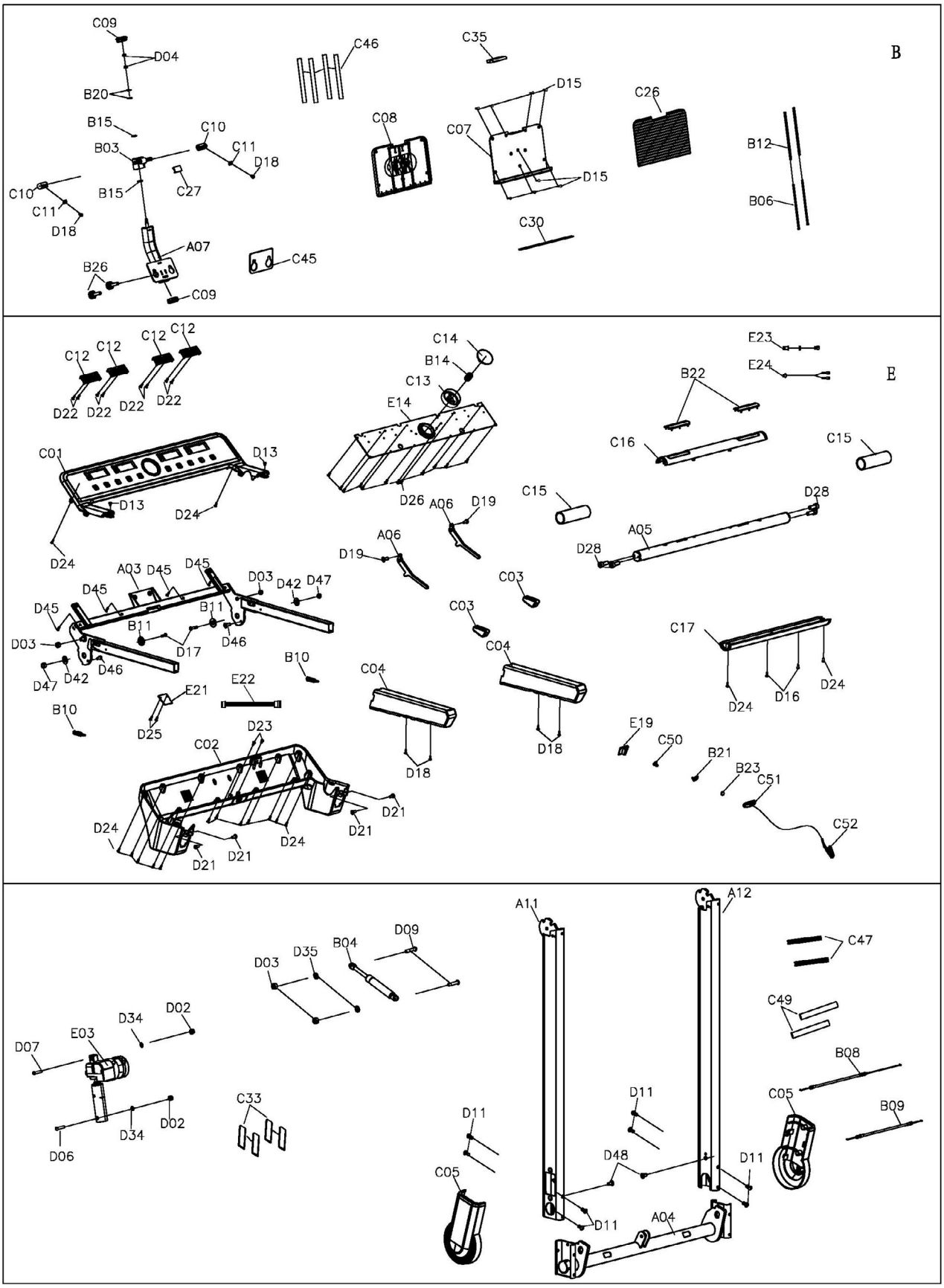
B
C09
D04
B20
C46
C35
D15
C26
B15
C10
C11
D18
B03
C08
C07
B12
C10
B15
C27
D15
C11
D18
B06
C30
A07
C45
B26
C09
E
C12
C12
C12
C12
D22
D22
D22
D22
C14
B14
C13
E14
E23
E24
B22
C16
C15
C01
D13
D13
D24
D24
D26
A06
D19
C15
D28
A05
D28
A06
D19
A03
D45
D45
D45
D03
D42
D47
C03
D45
B11
B11
D46
D03
D17
C03
C04
C17
D47
D42
D46
B10
C04
D24
D16
D24
E21
E22
B10
D25
D23
C02
D18
D18
E19
C50
B21
B23
C51
D21
D21
D24
D24
D21
D21
C52
A11
A12
D09
B04
D35
D03
C47
C49
D34
D02
E03
D07
B08
C33
D11
C05
B09
D11
D34
D02
D06
D48
D11
C05
D11
A04

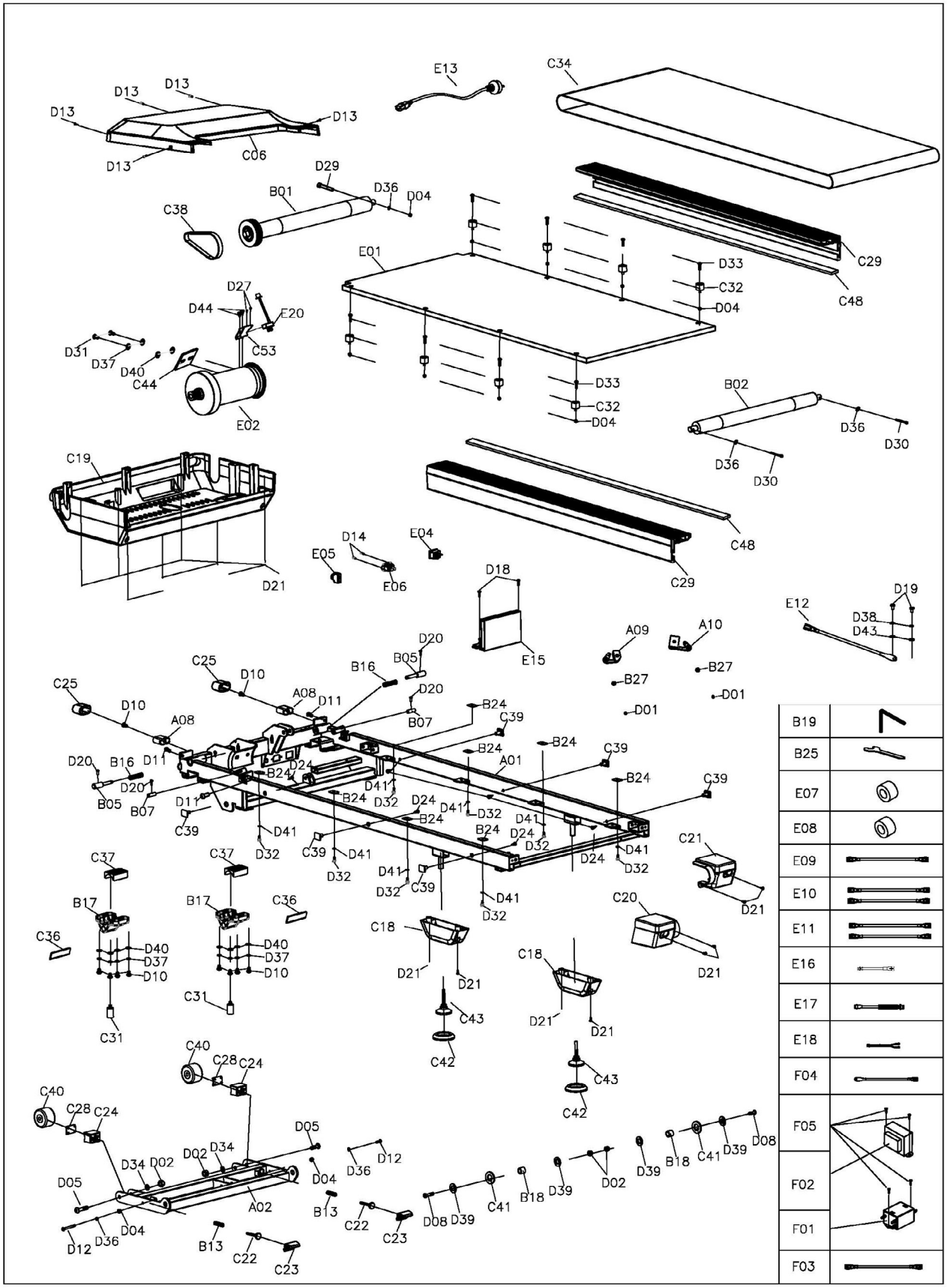

E13
C34
D13
D13
D13
D13
D13
C06
D29
B01
D36
D04
C38
E01
D33
C32
D04
C29
C48
D27
D44
E20
C53
D31
D37
D40
C44
E02
D33
C32
D04
B02
D36
D30
D36
D30
C19
D21
D14
E04
E05
E06
C48
C29
D18
E15
D19
E12
D38
D43
A09
A10
B27
B27
D01
D01
D20
B05
B16
C25
D10
A08
D11
D20
B07
B24
C39
B24
C39
A01
B24
C39
D20
B16
D11
D20
B05
B07
D11
C39
D24
B24
D41
D32
D24
D41
D32
B24
D41
D32
B24
D24
D32
D41
D32
D24
D41
D32
C21
D21
C37
C37
B17
B17
C36
C36
D40
D37
D10
D40
D37
D10
C31
C31
C39
D41
D32
C39
D41
D32
C20
D21
C18
D21
D21
C18
D21
D21
C43
C42
C43
C42
C40
C28
C24
C40
C28
C24
D05
D34
D02
D02
D34
D05
D04
D36
D12
A02
B13
C22
C23
D08
D39
C41
B18
D39
D02
D39
B18
C41
D39
D08
D12
D36
D04
B13
C22
C23
B19
B25
E07
E08
E09
E10
E11
E16
E17
E18
F04
F05
F02
F01
F03

10 WARRANTY

Products from BodyMax® are subject to strict quality control. However, if a fitness equipment purchased from us does not work perfectly, we take it very seriously and ask you to contact our customer service as indicated. We are happy to help you by phone via our service hotline.

Error Descriptions
Your fitness equipment is developed for long-term, high-quality training. However, should a problem arise, please first read the operating instructions. For further assistance, please contact your contract partner or call our service hotline. To ensure your problem is solved as quickly as possible, please describe the defect as exactly as possible.

In addition to the statutory warranty, we provide a warranty for every fitness equipment purchased from us according to the following provisions.

Your statutory rights are not affected.

Warrantee
The warrantee is the first/original buyer.

Warranty periods
The following warranty periods begin on delivery of the fitness equipment.

Warranty period
The warranty periods, shown on our web shop, begin on delivery of the fitness equipment. The respective warranty periods for your equipment can be found on its product website.

Repair Costs
According to our choice, there will either be a repair, a replacement of individual damaged parts or a complete replacement. Spare parts, that have to be mounted while assembling the equipment, have to be replaced by the warrantee personally and are not a part of repair. After the expiration of the warranty period, the responsibility for parts costs, repair costs, installation costs and delivery costs lies with the warranty holder.

The terms of use are defined as follows:

+ Home use: solely for private use in private households up to 3 hours per day
+ Semi-professional use: up to 6 hours per day (e. g. rehabilitation centres, hotels, clubs, company gyms)
+ Professional use: more than 6 hours per day (e. g. commercial gyms)

Warranty Service
Within the warranty period, equipment which develops faults as a result of material or manufacturing defects, will be repaired or replaced at our discretion. Ownership of equipment or parts of equipment which have been replaced is transferred to us. The warranty period is not extended nor does a new warranty period begin following repair or replacement under the warranty.

Warranty Conditions
For the warranty to be valid, the following steps must be taken:

Please contact our customer service by email or phone. If the product under warranty has to be sent in for repair, the seller bears costs. After expiry of the warranty, the buyer bears the costs of transport and insurance. If the fault is covered by our warranty, you will receive a new or repaired equipment in return.

Warranty claims are invalid in case of damage resulting from:

+ misuse or improper handling
+ environmental influences (moisture, heat, electrical surge, dust, etc.)
+ failure to follow the current safety measures for the equipment
+ failure to follow the operating instructions
+ use of force (e. g. hitting, kicking, falling)
+ interventions which were not carried out by one of our authorized service centres
+ unauthorised repair attempts

Proof of Purchase and Serial Number
Please make sure that you are able to provide the appropriate receipt when claiming on your warranty. So that we can clearly identify the model of your equipment, and for the purposes of our quality control, you will need to give the serial number of your equipment, when contacting the service team. Where possible please have your serial number and your customer number ready when you call our service hotline. It will help us to deal with your request swiftly.

If you cannot find the serial number on your fitness equipment, our service team is at your disposal to offer further information.

Service outside of the Warranty Period
We are also happy to issue an individual cost estimate if there is a problem with your fitness equipment after the warranty has expired, or in cases which do not fall under the terms of the warranty, e. g. normal wear and tear. Please contact our customer service team to find a quick and cost-effective solution to your problem. In such a case you will be responsible for the delivery costs.

Communication
Many problems can be solved just by speaking to us as your specialist supplier. We know how important it is to you as a user of the fitness equipment to have problems solved quickly and simply, so you can enjoy working out with minimal interruption. For that reason, we also want to resolve your queries quickly and in a straightforward manner. Thus, please always keep your customer number and the serial number of the faulty equipment handy.

11 CONTACT

DE

TECHNIK

+49 4621 4210-900
+49 4621 4210-698
technik@fitshop.de
Öffnungszeiten entnehmen Sie unserer Homepage.

SERVICE

0800 20 20277 (kostenlos)
04621 4210 - 0
info@fitshop.de
Öffnungszeiten entnehmen Sie unserer Homepage: https://stg.fit/statita

DK

TEKNIK OG SERVICE

80 90 16 50
+49 4621 4210-945
info@fitshop.dk
Åbningstider kan findes på hjemmesiden: https://stg.fit/statit7

UK

CUSTOMER CARE

+44 141 737 2249 or +44 141 876 3972
customercare@fitshop.co.uk
You can find the opening hours on our homepage: https://stg.fit/statitd

FR

TECHNIQUE & SERVICE

+33 (0) 189 530984
+49 4621 42 10 933
info@fitshop.fr
Vous trouverez les heures d'ouverture sur notre site Internet: https://stg.fit/statit4

BE

TECHNIQUE & SERVICE

02 732 46 77
+49 4621 4210 933
info@fitshop.be
Vous trouverez les heures d'ouverture sur notre site Internet: https://stg.fit/statit8

ES

TECNOLOGÍA Y SERVICIOS

938 805 790
info@fitshop.es
Consulta nuestro horario de apertura en la página web: https://stg.fit/statit5

NL

TECHNISCHE DIENST & SERVICE

+31 172 619961
service@fitshop.nl
De openingstijden vindt u op onze homepage: https://stg.fit/statit3

INT

TECHNICAL SUPPORT & SERVICE

+49 4621 4210-944
service-int@fitshop.de
You can find the opening hours on our homepage: https://stg.fit/statita

PL

DZIAŁ TECHNICZNY I SERWIS

22 307 43 21
+49 4621 42 10-948
info@fitshop.pl
Godziny otwarcia można znaleźć na stronie głównej: https://stg.fit/statit6

AT

TECHNIK & SERVICE

0800 20 20277 (Freecall)
+49 4621 42 10-0
info@fitshop.at
Öffnungszeiten entnehmen Sie unserer Homepage: https://stg.fit/statitb

CH

TECHNIK & SERVICE

0800 202 027
+49 4621 42 10-0
info@fitshop.ch
Öffnungszeiten entnehmen Sie unserer Homepage: https://stg.fit/statit9

Please find a detailed overview including address and opening hours for all stores of Fitshop UK on the following website:

www.fitshop.co.uk/storelocator

WE LIVE FITNESS

WEBSHOP AND SOCIAL MEDIA

The Fitshop Group is Europe's largest specialist for home fitness equipment with currently 70 stores and one of the world's most renowned online mail order companies for fitness equipment.

Fitshop UK is part of the Fitshop Group. Private customers order via the 25 web shops in the respective national language or have their desired equipment assembled on site. In addition, the company supplies fitness studios, hotels, sports clubs, companies and physio practices with professional equipment for endurance and strength training.

The Fitshop group offers a wide range of fitness equipment from renowned manufacturers, high-quality in-house developments and comprehensive services, such as a build-up service and sports scientific advice before and after the purchase. The company employs numerous sports scientists, fitness trainers and competitive athletes.

Visit us also on our social media platforms or our blog!

FIT SHOP
https://www.fitshop.co.uk
www.fitshop.co.uk/blog

www.facebook.com/fitshop.co.uk

www.instagram.com/fitshop_uk

www.youtube.com/@fitshop_uk

TAURUS

cardiostrong

BODYCRAFT

BodyMax

Notes

Notes

Notes

BodyMax