BodyMax

ASSEMBLY AND OPERATING INSTRUCTIONS

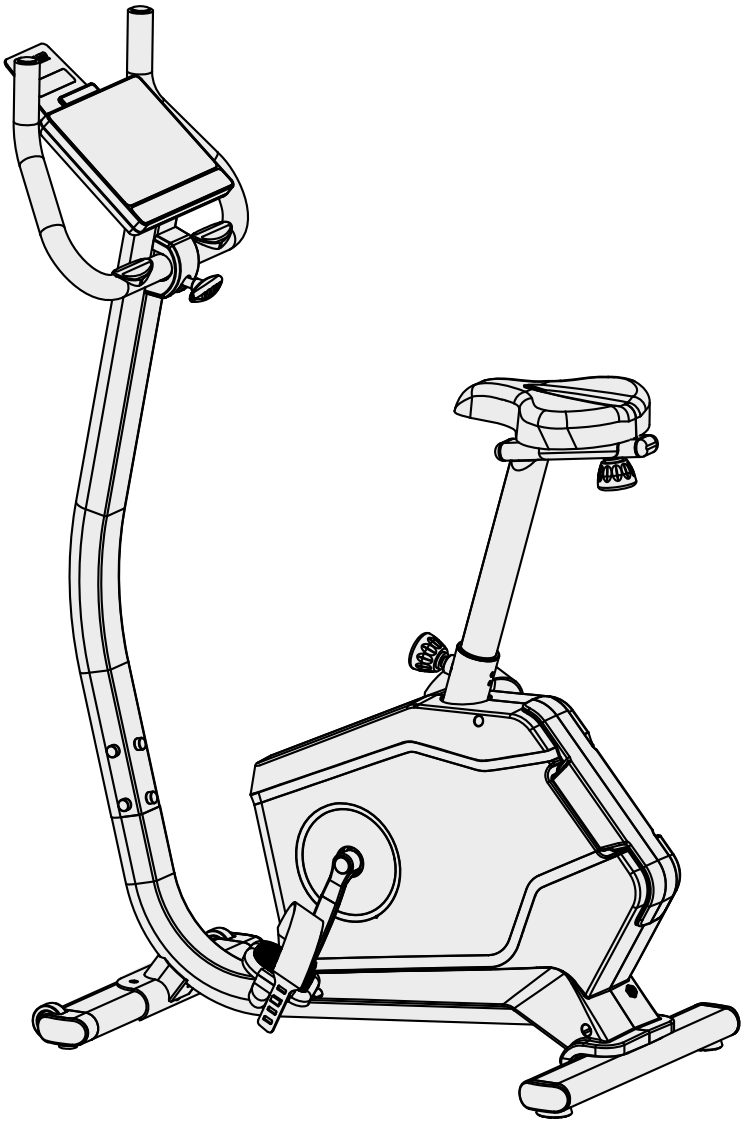

max. 130 kg

~ 60 Min.

27 kg

L 104 | W 52 | H 140

FSUKBMUC200.01.01

SKU: BM-UC200

UC200

Content

1	GENERAL INFORMATION	8
1.1	Technical Data	8
1.2	Technical Drawings	10
1.3	Personal Safety	11
1.4	Electrical Safety	12
1.5	Set-Up Place	13
2	ASSEMBLY	14
2.1	General Instructions	14
2.2	Scope of Delivery	14
2.3	Assembly	17
3	OPERATING INSTRUCTIONS	24
3.1	Console Overview	24
3.2	Button Functions	25
3.3	Display Modes	26
3.4	Displayed Values	27
3.5	Training Programmes	27
3.5.1	Quick Start	28
3.5.2	Preset Programmes	28
3.5.3	Target Programmes	30
3.5.4	Target-Watt Programme	32
3.5.5	Heart Rate Controlled Programmes	34
3.5.6	User-Defined Programmes	36
3.6	Training Overview	37
3.7	USB-C Connection	38
3.8	Watt Table	39
4	WORKOUT TIPS	40
4.1	General Instructions	40
4.1.1	Training clothes	40
4.1.2	Warming up and stretching	40
4.1.3	Medication	41
4.1.4	Used muscle groups	41
4.1.5	Exercise frequency	41
4.2	Workout journal	43
4.3	Wireless Connection and Fitness Apps	44

5 STORAGE AND TRANSPORT 45

5.1 General Instructions 45
5.2 Transportation Wheels 45

6 TROUBLESHOOTING, CARE AND MAINTENANCE 46

6.1 General Instructions 46
6.2 Faults and Fault Diagnosis 46
6.3 Error Codes and Troubleshooting 47
6.4 Maintenance and Inspection Calendar 48

7 DISPOSAL 48

8 RECOMMENDED ACCESSORIES 49

9 ORDERING SPARE PARTS 50

9.1 Serial Number and Model Name 50
9.2 Parts List 51
9.3 Exploded Drawing 55

10 WARRANTY 57

11 CONTACT 59

Dear customer,
Thank you for choosing training equipment from BodyMax.

BodyMax is your reliable partner for home and commercial gym equipment. We are specialized in cardio and strength training machines for home and commercial use. Our products are not only strong, durable, and affordable but also designed to fit your personal needs.

The BodyMax headquarter is based in Rutherglen, Glasgow. Our brand was created with the intention of providing innovative exercise equipment at affordable prices for users of all training levels.

You can find further information at www.bodymax-fitness.com

Intended Use

The equipment may only be used for its intended purpose.

The equipment is only suitable for home use. The equipment is not suitable for semi-professional (e.g. hospitals, associations, hotels, schools, etc.) and commercial or professional use (e.g. fitness studios).

Legal Notice

Fitshop GmbH
Europe's No. 1 for home fitness

International Headquarters
Flensburger Straße 55
24837 Schleswig
Germany

Management:
Christian Grau
Sebastian Campmann
Dr. Bernhard Schenkel

No. HRB 1000 SL
Local Court Flensburg
European VAT Number: DE813211547

Disclaimer

© BodyMax is a registered brand of the company Fitshop GmbH. All rights reserved. Any use of this trademark without the explicit written permission of Fitshop is prohibited.

Product and manual are subject to change. Technical data can be changed without advance notice.

FITSHOP

Europe's No.1 for Home Fitness

ABOUT THIS MANUAL

Please carefully read the entire manual before installation and first use. The manual will help you to quickly set up the system and explains how to safely use it. Make sure that all persons exercising with the equipment (especially children and persons with physical, sensory, mental or motor disabilities) are informed about this manual and its contents in advance. In case of doubt, responsible persons must supervise the use of the equipment.

Due to ongoing changes and software optimisations, the manual may have to be updated. If you notice any discrepancies during assembly or use, please refer to the manual uploaded to the webshop. The latest manual is always available there.

This equipment has been manufactured according to the latest safety knowledge. As far as possible, potential safety hazards which could cause injury have been eliminated. Make sure to carefully follow the instructions and that all parts are securely in place. If required, read through the instructions again to correct any mistakes.

Training devices must be classified according to accuracy and use. Accuracy classes are only applicable to devices that display training data.

Accuracy classes

Class A: high accuracy.
Class B: medium accuracy.
Class C: low accuracy.

The use classes explain the intended use of the training device.

Use classes

Class S (studio): professional and/or commercial use.
These training devices are intended for the use in training rooms of facilities such as sports clubs, school facilities, hotels, clubs and studios whose access and supervision is specifically regulated by the owner (person with legal responsibility).

Class H (home use): use at home.
These stationary training devices are intended for the use in private homes where access to the training device is regulated by the owner (person with legal responsibility).

Please pay close attention to the safety and maintenance instructions given here. The contract partner cannot be held liable for damage to health, accidents or damage to the equipment when it is not used in accordance with these instructions.

The following safety instructions may appear in this manual:

▶ **ATTENTION**
This notice indicates potentially hazardous situations which, if not avoided, may result in property damage.

⚠ **CAUTION**
This notice indicates potentially hazardous situations which, if not avoided, may result in slight or minor injuries!

⚠ **WARNING**
This notice indicates potentially hazardous situations which, if not avoided, may result in death or serious injuries!

⚠ **DANGER**
This notice indicates potentially hazardous situations which, if not avoided, will result in death or serious injuries!

ⓘ **NOTICE**
This notice indicates further useful information.

Retain these instructions in a safe place for future reference, maintenance or when ordering replacement parts.

1.1 Technical Data

Weight and dimensions	
Item weight (gross, including packaging)	30.5 kg
Item weight (net, without packaging)	27 kg
Packaging dimensions of cartons (L x W x H)	99 cm x 24.5 cm x 62 cm
Dimensions (L x W x H)	104 cm x 52 cm x 140 cm
Additional measurement data	
Q-Factor	17.6 cm
Transmission ratio	1 : 8.0
Crank length	17 cm
Maximum load	
Maximum user weight	130 kg
Technical specifications	
Flyweight	5 kg
Resistance system	Electronic magnetic brake system
Resistance levels	32
Power supply	Mains supply
Console data	
Display	Pulse
	Speed
	Distance
	Calories
	Time
Display size	7 Inches
Display type	LCD
Wattage specifications	
Min. and max. watts at 60 RPM	30 - 250 Watt

Programme overview	
Quick start	1
Target programmes	3
Heart rate programmes	3
Preset programmes	30
Target watt programmes	1
User programmes	2
Other data	
Menu language	English
Wireless connection	Yes
Heart rate monitor	Hand pulse sensors, optional: chest strap
Use class	H

1.2 Technical Drawings

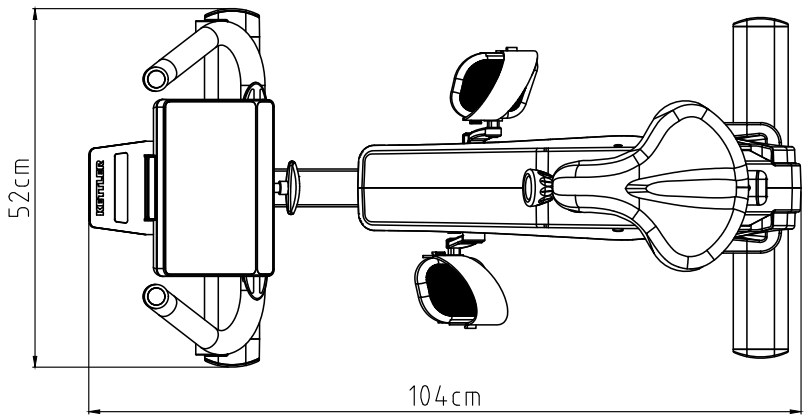

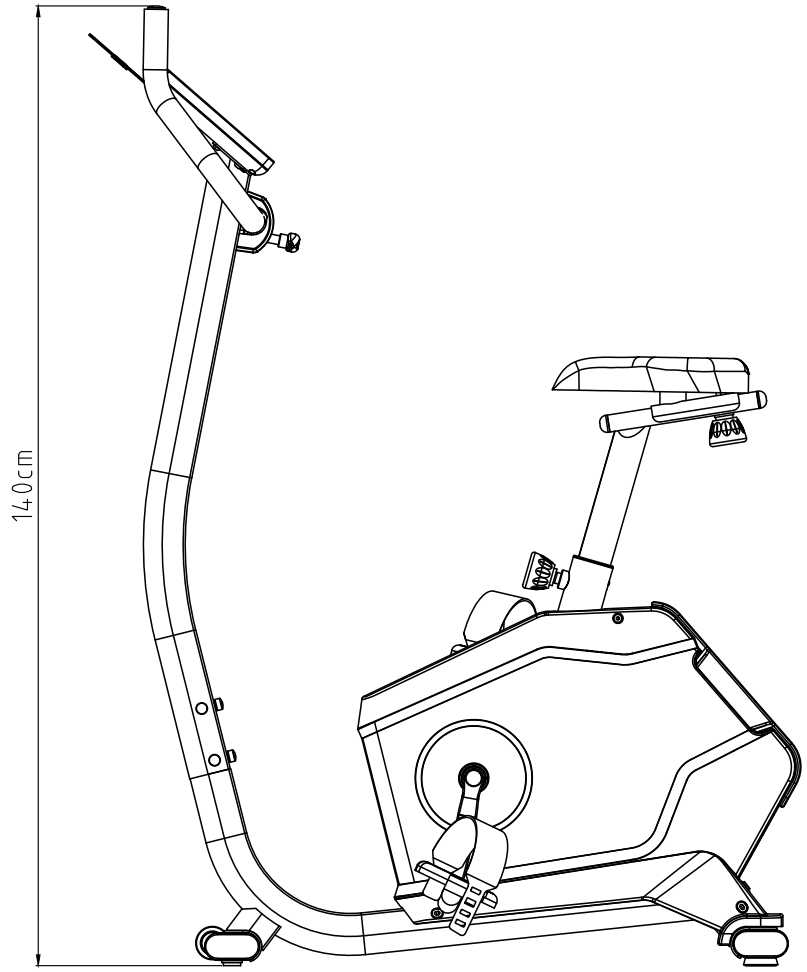

1.3 Personal Safety

⚠ **DANGER**

+ Before you start using the equipment, you should consult your physician that this type of exercise is suitable for you from a health perspective. Particularly affected are persons who: have a hereditary disposition to high blood pressure or heart disease, are over the age of 45, smoke, have high cholesterol values, are overweight and/or have not exercised regularly in the past year. If you are under medical treatment that affects your heart rate, medical advice is absolutely essential.
+ Note that excessive training can seriously endanger your health. Please also note that heart rate monitoring systems can be inaccurate. If you notice any signs of weakness, nausea, dizziness, pain, shortness of breath, or other abnormal symptoms, stop exercising immediately and seek advice from your doctor if necessary.
+ The owner must communicate all warnings and instructions to the user.

⚠ **WARNING**

+ This equipment may not be used by children under the age of 14.
+ Children should not be allowed unsupervised access to the equipment.
+ Persons with disabilities must have a medical license and must be under strict observation when using the equipment.
+ The equipment is strictly for use by one person at a time.
+ If your equipment provides a safety key, the clip of the safety key must be attached to your clothing before starting your training. In the event of a fall, the EMERGENCY STOP of the equipment can be initiated.
+ There is a risk of injury from spinning pedals and/or an exposed flywheel in the absence of a freewheel. Never get on or off the equipment when the pedals or the flywheel are still moving. Always make sure that the pedals and the flywheel have come to a complete stop.
+ Support yourself with at least one hand on the handlebar when getting on and off the equipment. Only dismount from the equipment when the pedals have come to a complete stop.
+ Keep your hands, feet and other body parts, hair, clothing, jewellery and other objects well clear of moving parts.
+ During use, wear suitable sports clothing rather than loose or baggy clothing. When wearing sports shoes, make sure they have suitable soles, preferably made of rubber or other non-slip materials. Shoes with heels, leather soles, studs or spikes are unsuitable. Never exercise barefoot.

⚠ **CAUTION**

+ If your equipment needs to be connected to the power supply with a mains cable, make sure that the cable is not a potential tripping hazard.
+ Make sure that nobody is within the range of motion of the equipment during training so as not to endanger you or other persons.
+ Always tighten the pedal strap before you start training to prevent your feet from slipping.
+ Be aware that if adjustment devices are left protruding, they may impede the user's movement.

CAUTION

+ The safety level of the appliance can only be maintained if it is regularly checked for damage and wear.

ATTENTION

+ Do not insert any objects of any kind into the openings of the device.
+ To protect the equipment from use by unauthorised third parties, always remove the power cable (if existing) when not in use and store it in a safe place that is inaccessible to unauthorised persons (e.g. children).
+ Class B and C crank training equipment is not suitable for high accuracy purposes.

1.4 Electrical Safety

DANGER

+ In order to reduce the risk of an electric shock, always unplug the equipment from the mains socket immediately after your workout, before assembly or dismantling, and before maintenance or cleaning. Do not pull on the cable.

WARNING

+ Do not leave the equipment unattended while the mains cable is plugged into the mains socket. During your absence, the mains cable must be removed from the mains socket to prevent improper use by third parties or children.
+ If the mains cable or plug is damaged or defective, contact your contract partner. Until repair, the equipment must not be used.

ATTENTION

+ The equipment requires a mains connection of 220-230 V with 50 Hz mains voltage.
+ The equipment may only be connected directly to an earthed socket using the supplied mains cable. Extension cables must conform to VDE guidelines. Always completely unwind the mains cable.
+ The socket must be protected by a fuse with a minimum fuse rating of "16 A, slow blow".
+ Do not make any changes to the mains cable or the mains plug.
+ Keep the mains cable away from water, heat, oil and sharp edges. Do not route the mains cable underneath the equipment or under a carpet or rug, and do not place any objects on top of it.
+ If your purchased item is equipped with a TFT console, software updates must be carried out regularly. Follow the instructions on the console to perform the update(s).
+ The software systems on gym equipment with TFT consoles are set up only for the pre-installed apps. Do not install any additional apps.

NOTICE

+ The pre-installed apps on TFT consoles are produced and provided by external manufacturers. Fitshop does not take any responsibility for the availability, functionality or contents of these apps.

1.5 Set-Up Place

⚠ **WARNING**

+ Do not place the equipment in main corridors or escape routes.

⚠ **CAUTION**

+ Choose a location in which to place the equipment such that there is enough free space/ clearance to the front, the rear and to the sides of the equipment.
+ The training room should be well ventilated during training and not be exposed to any draughts.
+ Choose the place in which to set up the equipment such that there is enough free space/ clearance to the front, the rear and to the sides of the equipment.
+ The free area in the direction from which the exercise equipment is accessed must be at least 0.6 m larger than the exercise area.
+ The set-up and mounting surface of the equipment should be flat, loadable and solid.

▶ **ATTENTION**

+ The device may only be used in one building, in sufficiently tempered and dry rooms (ambient temperatures between 10°C and 35°C). The equipment should not be used outdoors or in rooms with high humidity (over 70%) like swimming pools.
+ A floor protective mat/equipment underlay can help to protect high-quality floor coverings (parquet, laminate, cork, carpets) from dents and sweat and can help to level out slight unevenness.
+ For Class S equipment, the exercise equipment may only be used in areas where access, supervision and control are specifically regulated by the owner.

2.1 General Instructions

⚠ **DANGER**

+ Do not leave any tools, packaging materials such as foils or small parts lying around, as otherwise there is a danger of suffocation for children. Keep children away from the equipment during assembly.

⚠ **WARNING**

+ Pay attention to the instructions attached to the equipment in order to reduce the risk of injuries.

⚠ **CAUTION**

+ Ensure to have sufficient room for movement in each direction during assembly.
+ The assembly of the equipment must be carried out by at least two adults. If in doubt, seek the help of a third technically skilled person.

▶ **ATTENTION**

+ To prevent damage to the equipment and the floor, assemble the equipment on a mat or packaging board.

ⓘ **NOTICE**

+ In order to make the assembly as simple as possible, some screws and nuts to be used can already be pre-assembled.
+ Ideally, assemble the equipment at its later set-up place.

2.2 Scope of Delivery

The scope of delivery consist of the following parts. At the beginning, check whether all parts and tools belonging to the device are included in the scope of delivery and whether damage has occurred. In the event of complaints, the contractual partner must be contacted directly.

⚠ **CAUTION**

If parts of the scope of delivery are missing or damaged, the assembly must not be carried out.

ⓘ **NOTICE**

Required tools: wrench, allen key, screwdriver

ⓘ **NOTICE**

In the assembly steps, the main frame is shown as component “Z” for better clarity. However, in the exploded drawing and the parts list it is not listed as an individual part. This simplified representation is solely intended to make orientation during assembly easier.

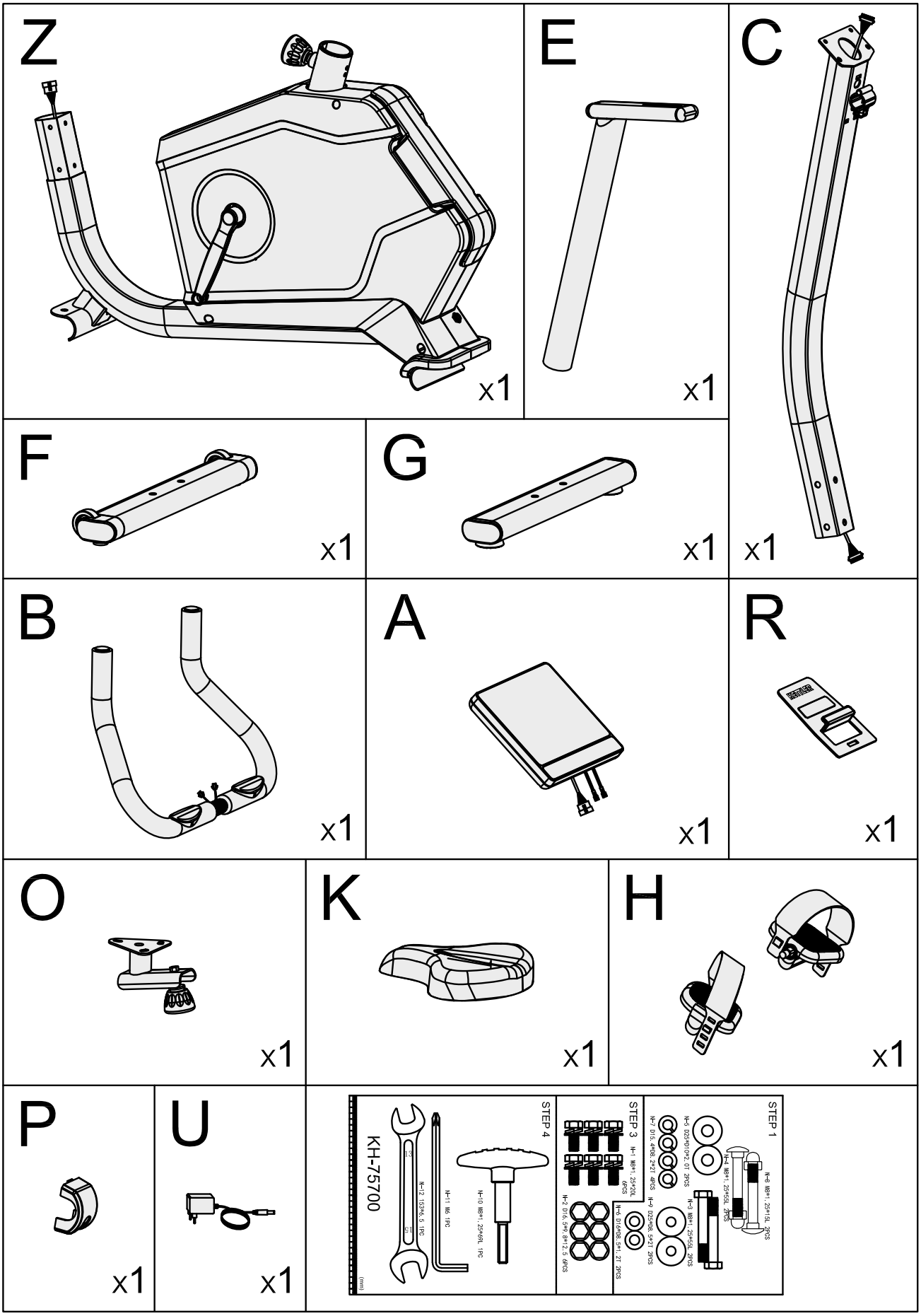
Z
x1
E
x1
C
x1
F
x1
G
x1
B
x1
A
x1
R
x1
O
x1
K
x1
H
x1
P
x1
U
x1
STEP 1
STEP 3
STEP 4
KH-75700

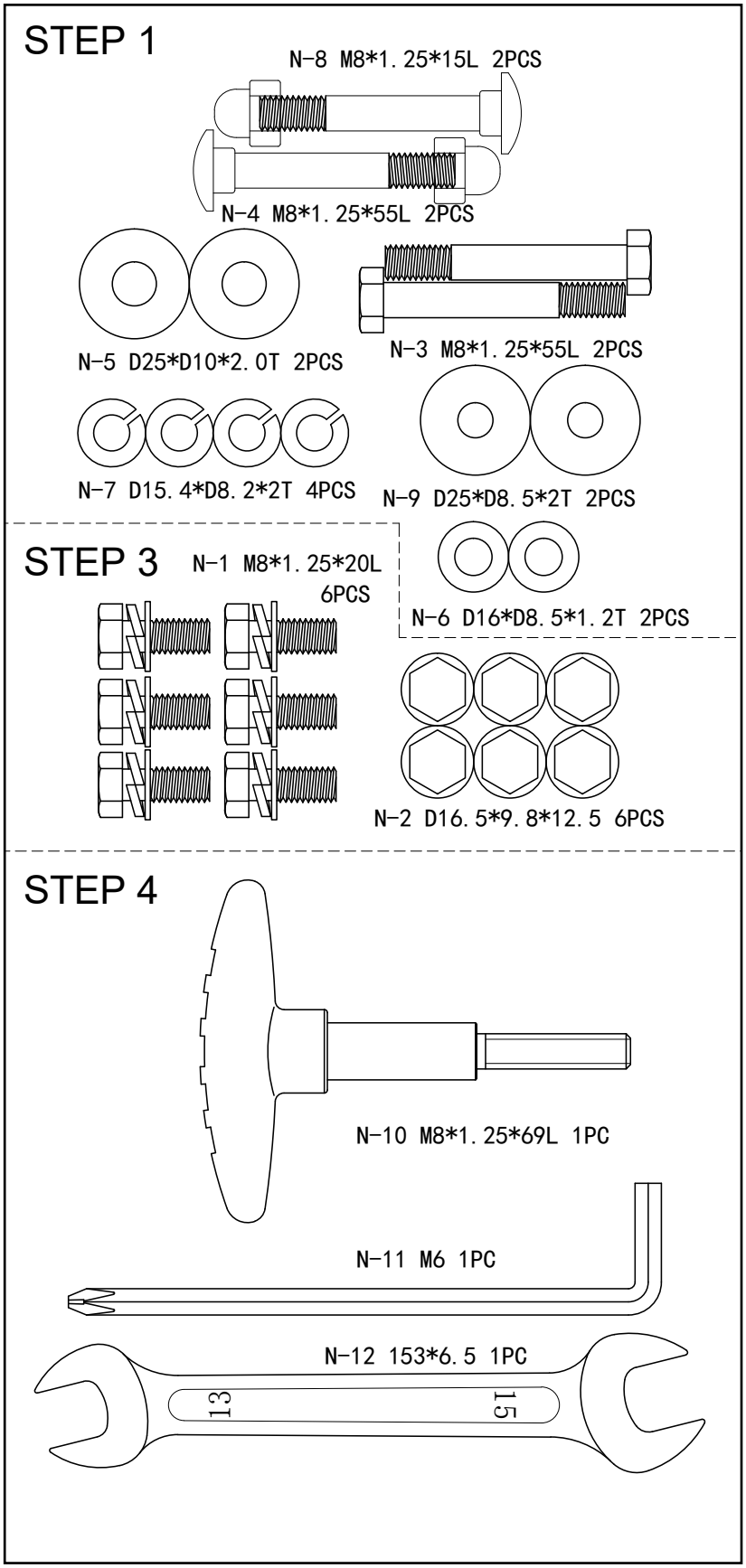
STEP 1
N-8 M8*1.25*15L 2PCS
N-4 M8*1.25*55L 2PCS
N-5 D25*D10*2.0T 2PCS
N-3 M8*1.25*55L 2PCS
N-7 D15.4*D8.2*2T 4PCS
N-9 D25*D8.5*2T 2PCS
STEP 3
N-1 M8*1.25*20L
6PCS
N-6 D16*D8.5*1.2T 2PCS
N-2 D16.5*9.8*12.5 6PCS
STEP 4
N-10 M8*1.25*69L 1PC
N-11 M6 1PC
N-12 153*6.5 1PC
13
15

2.3 Assembly

Before assembly, take a close look at the individual assembly steps shown and carry out the assembly in the order given.

ⓘ **NOTICE**

+ First loosely screw all parts together and check that they fit properly. Tighten the screws using the tool only when you are instructed to do so.
+ Do not tighten the screws and bolts with excessive force as they could be damaged.
+ If you have difficulty recognising the graphics, we recommend that you open and/or download the PDF instructions stored in the webshop on your end device (e.g. smartphone, tablet or PC). There you have the option of zooming in closer. Please note that the Adobe Acrobat Reader programme must be installed on your end device in order to open the file.

Step 1: Assembly of the stabilizers

Tool: wrench

1. Attach the front stabilizer (F) and main frame (Z) with two bolts (N-4), two flat washers (N-5), two flat washers (N-6), two spring washers (N-7) and two domed nuts (N-8).
2. Attach the rear stabilizer (G) and main frame (Z) with two bolts (N-3), two spring washers (N-7) and two flat washers (N-9).

N-3	M8*1.25*55L	X2
N-4	M8*1.25*55L	X2
N-5	D25*D10*2.0T	X2
N-6	D16*D8.5*1.2T	X2
N-7	D15.4*D8.2*2T	X4
N-8	M8*1.25*15L	X2
N-9	D25*D8.5*2.0T	X2

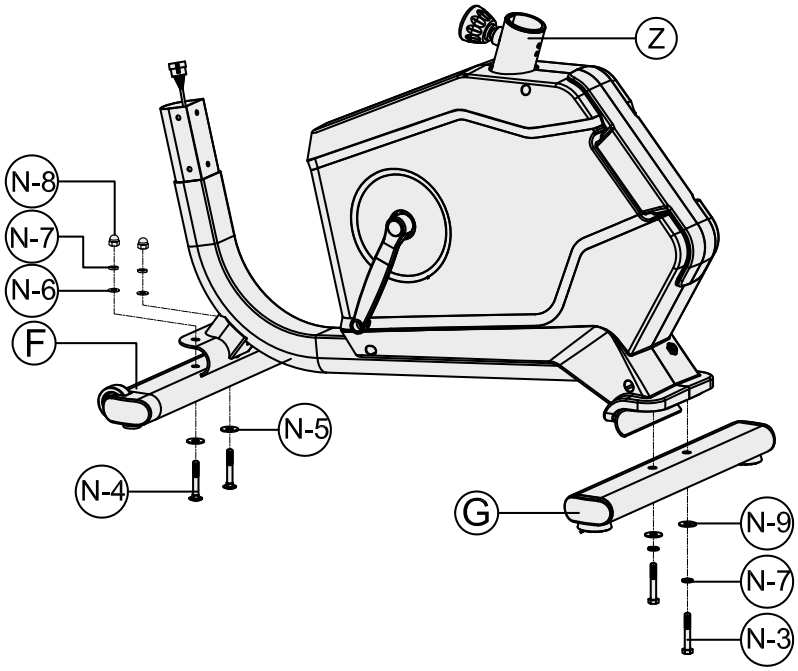

Step 2: Assembly of the seat

Tool: wrench

1. Loosen the knob on the main frame (Z) by turning it counterclockwise and slide the seat post (E) into the holder (Fig. 2-1).
2. Adjust the seat post (E) to the desired height.
3. Tighten the knob on the main frame (Z) by turning it clockwise.
4. Attach the seat (K-1) and seat post (O) with three flat washers (K-2) and three nylon nuts (K-3) (Fig. 2-2).
5. Remove the knob (O-3) and flat washer (O-2) from the seat post (O).
6. Attach the seat post (O) and seat post (E) with the previously removed knob (O-3) and flat washer (O-2) (Fig. 2-3).

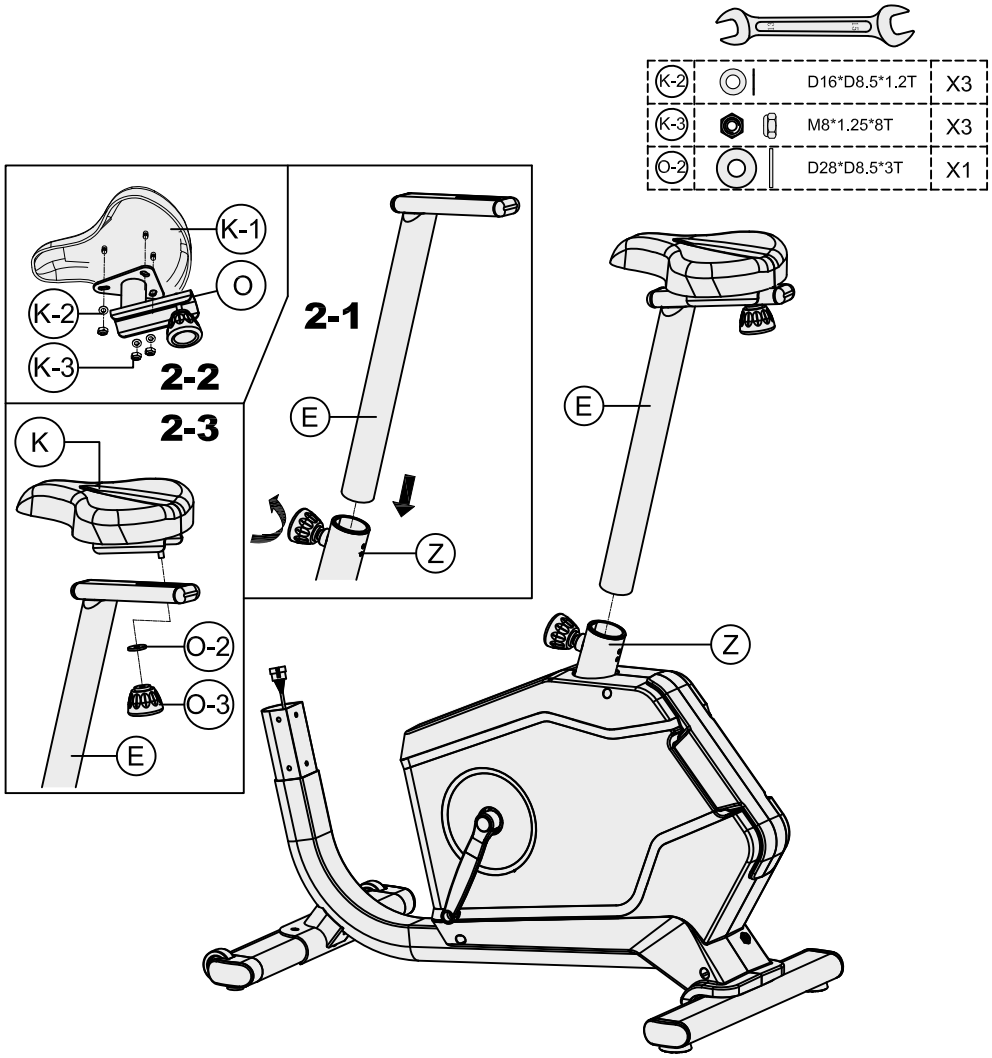

Step 3: Assembly of the console mast

Tool: wrench

▶ **ATTENTION**

+ Make sure the cables are not pinched in the following steps.
+ Make sure the connectors are properly seated.

1. Connect the upper computer cable (C-2) and the lower computer cable (D-5).
2. Attach the handlebar post (C) and main frame (Z) with six bolts (N-1).
3. Place the six screw covers (N-2) on the six bolts (N-1).

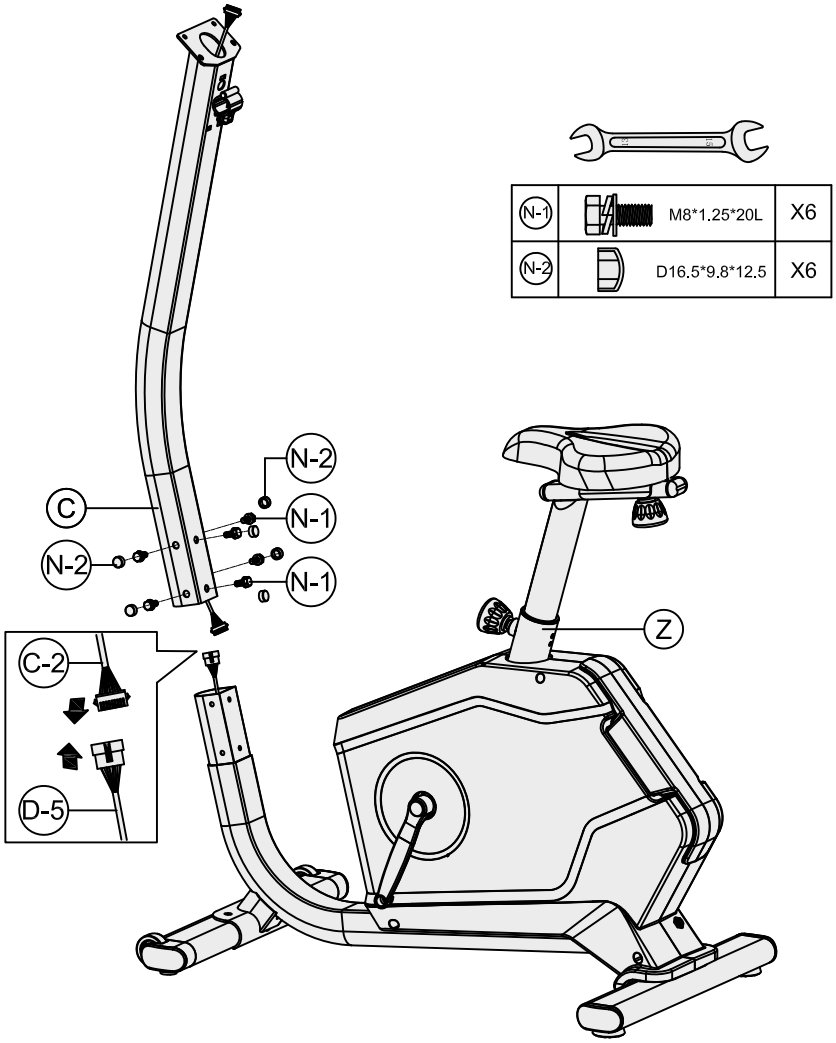

Step 4: Assembly of the console and handlebar

Tool: allen key, screwdriver

▶ **ATTENTION**

+ Make sure the cables are not pinched in the following steps.
+ Make sure the connectors are properly seated.

1. Attach the handlebar complete assembly (B) with the knob (N-2) to the handlebar post (C) (Fig. 4-1, 4-2).
2. Route the cables of the handle pulse sensors (C-2, B-4) through the handlebar post (C) (Fig. 4-3).
3. Place the handlebar cover (P) on the handlebar complete assembly (B) and attach it to the handlebar post (C) (Fig. 4-4).
4. Connect the cables of the handle pulse sensors (C-2, B-4) and the handlebar post cable (C) to the corresponding connectors of the computer (A-1) (Fig. 4-5).
5. Attach the computer (A-1) and handlebar post (C) with four bolts (A-2) (Fig. 4-6).
6. Insert the pad holder (R) into the computer (A-1) (Fig. 4-6).

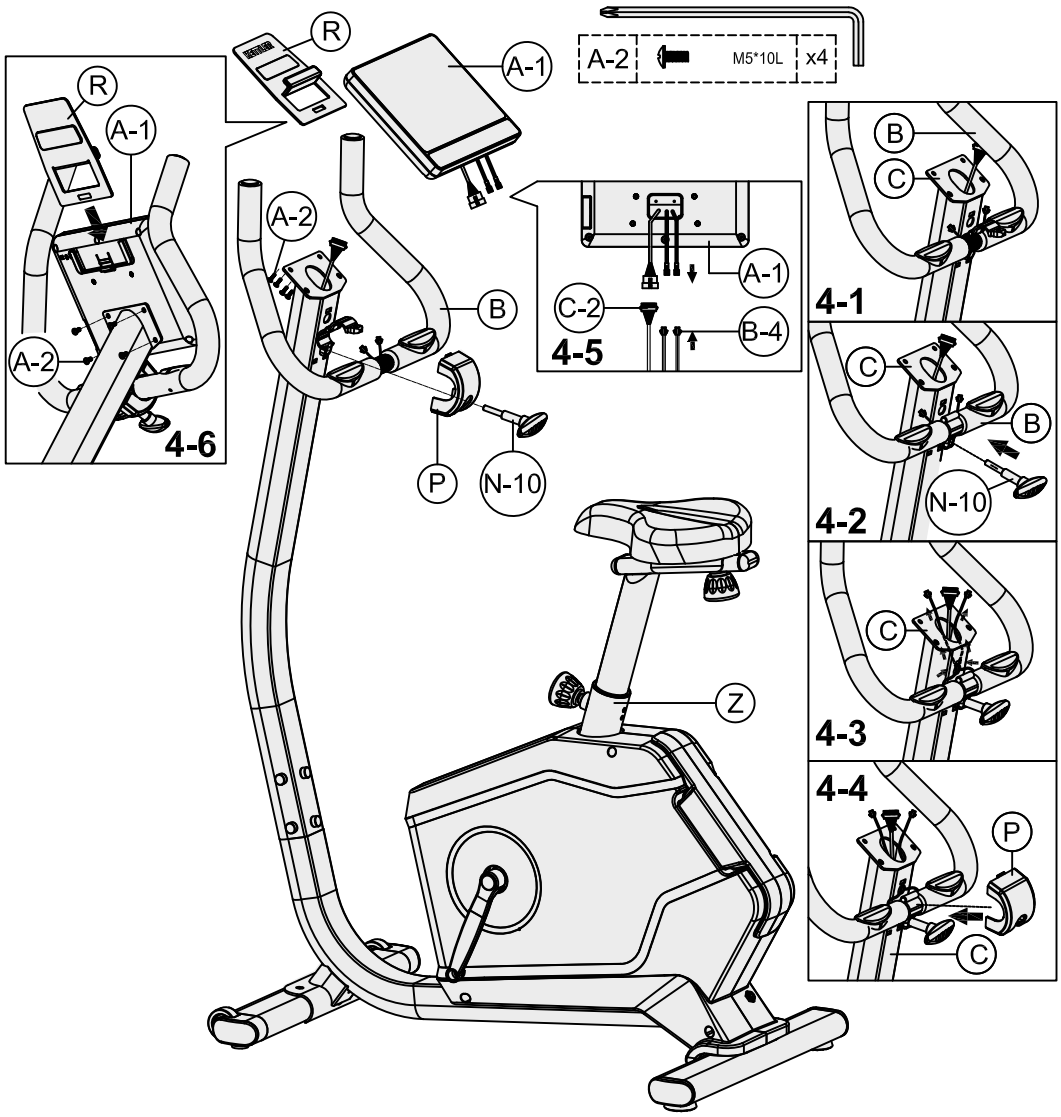

Step 5: Assembly of the pedals

⚠ **CAUTION**
Make sure the pedals are fully screwed in.

1. Attach the left pedal (H-1) by turning it counterclockwise into the left crank (I-1).
2. Attach the right pedal (H-2) by turning it clockwise into the right crank (I-2).
3. Tighten all screw connections.

→ ***The assembly is complete.***

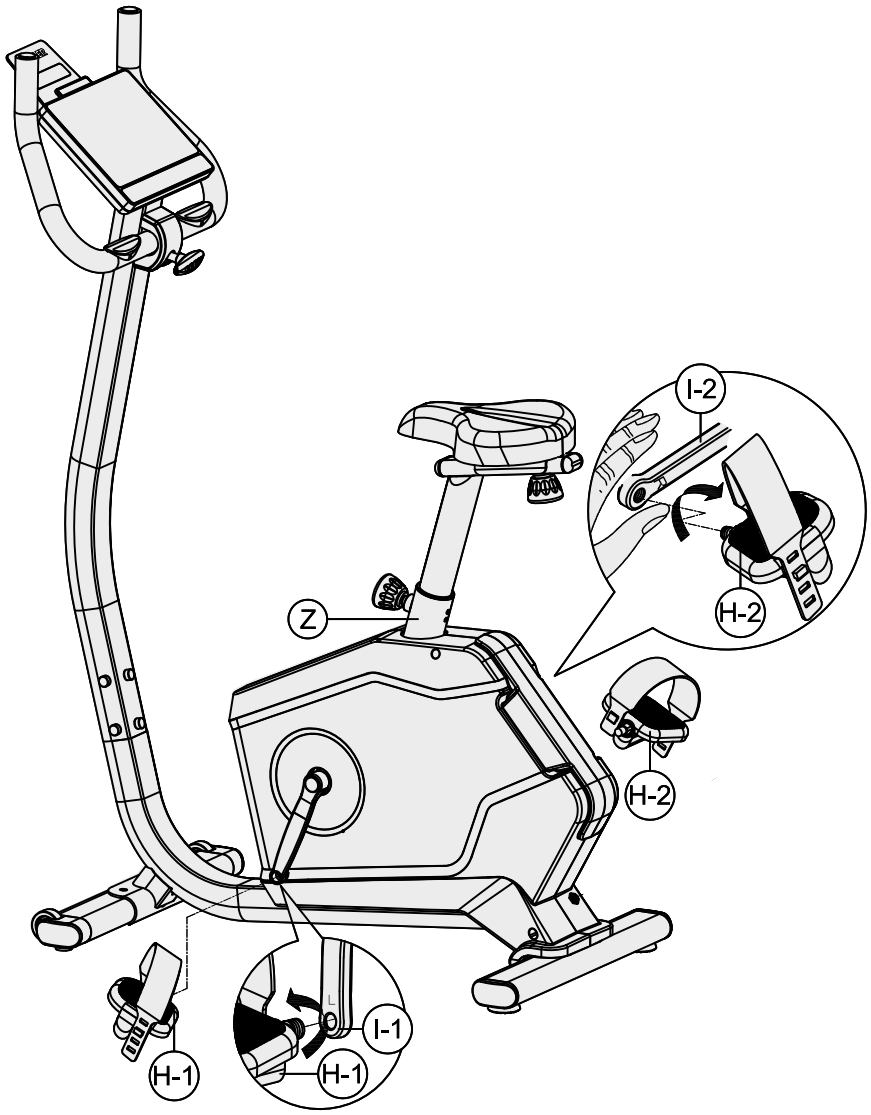

Step 6: **Adjustment of the stabilizers**

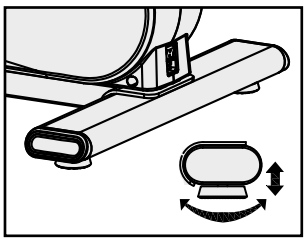

If the floor is uneven, you can stabilize the device by turning the two adjustment screws under the rear stabilizer (G).

1. Lift the device on the desired side and turn the adjustment screw under the stabilizer.
2. Turn the screw clockwise to raise the device.
3. Turn the screw counterclockwise to lower the device.

Step 7: **Connecting the device to power**

▶ **ATTENTION**
Do not connect the device to a power strip, as the device may not receive sufficient power, which may cause malfunctions.

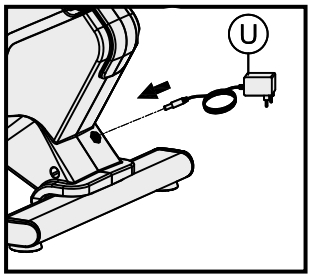

Plug the power adapter (U) into a socket that meets the electrical safety requirements.

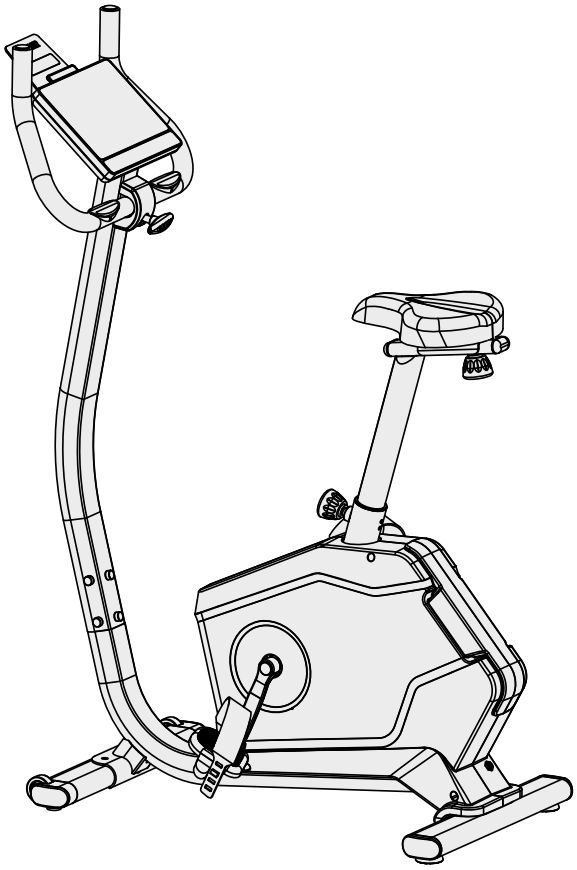

Step 8: Adjustment of the seat position

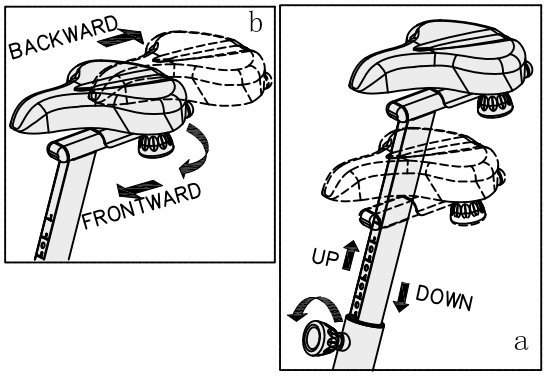

⚠ **CAUTION**
When adjusting vertically (a), do not exceed the minimum insertion depth.

1. Loosen the knobs by turning them counterclockwise.
2. Adjust the seat vertically (a) and/or horizontally (b) to the desired position.

⚠ **CAUTION**
When adjusting vertically (a), make sure the knob clicks into one of the adjustment holes.

3. Tighten the knobs by turning them clockwise.

Step 9: Adjustment of the handlebar

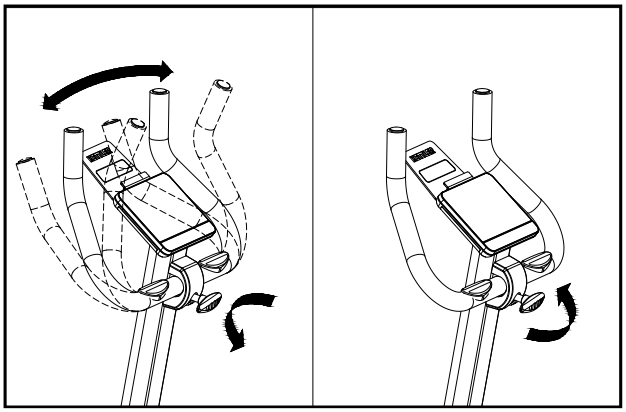

1. Loosen the knob on the handlebar by turning it counterclockwise.
2. Adjust the handlebar to the desired angle.
3. Tighten the knob by turning it clockwise.

Step 10: Adjustment of the pedal straps

ⓘ **NOTICE**
The strap should not press into your foot.

1. Place your foot in the center of the pedal.
2. Pull the flexible strap over the instep of your foot.
3. Insert one of the rectangular holes of the strap over the retaining mechanism on the side of the pedal.

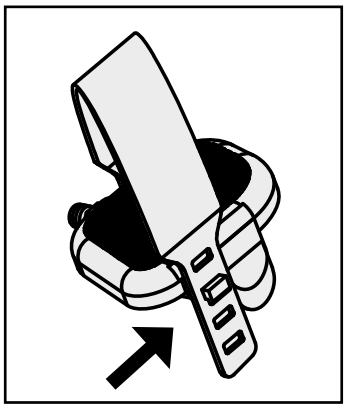

Correct mounting and dismounting

1. To mount, grasp the handlebar with both hands and place your left foot on the left pedal or your right foot on the right pedal first, then the other foot.
2. To dismount, grasp the handlebar with both hands and place one foot next to the device, then the other foot.

ⓘ **NOTICE**

+ Familiarise yourself with all the functions and setting options of the device before starting training. Have the proper use of this product explained to you by a specialist.
+ Always start your training with low intensity and increase evenly and gently. End your training with a cool-down phase. If you are unsure, please consult your physician.

3.1 Console Overview

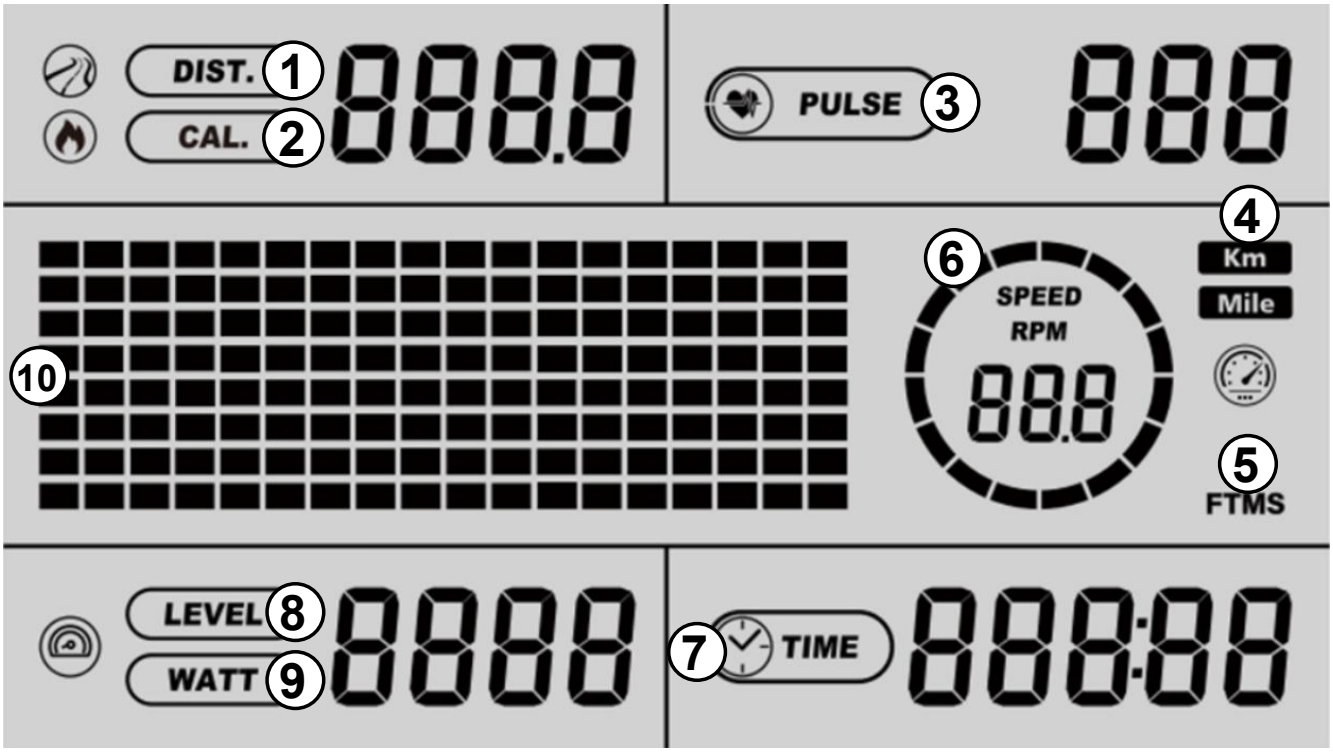

NO.	DISPLAY	NAME	FUNCTION
1	DIST.	Distance	+ Displays the training distance. + Display range: 0.0–999.9 + Setting range: 0.0–999.9 + Counts down in the target programme.
2	CAL.	Calories	+ Displays the burned calories. + Display range: 0.0–9999 + Setting range: 10.0–9990 + Counts down in the target programme.
3	PULSE	Pulse	Displays your pulse if the hand pulse sensors or the chest strap are in use. (Chest strap not included)
4	KM/MILE	Kilometers/Miles	Displays the measurement unit.

5	**FTMS**	**FTMS**	Displays whether a wireless connection is established.
6	**SPEED/ RPM**	**Speed/RPM**	Displays the speed in RPM and km/h. + Display range: 0.0–99.9 km/h + Display range: 0–999 RPM
7	**TIME**	**Time**	+ Displays the training time. + Display range: 0:00–999:59 + Setting range: 10:00–999:00 + Counts down in the target programme.
8	**LEVEL**	**Level**	+ Displays the resistance level. + Level: 1–32
9	**WATT**	**Watt**	Displays how many watts are being generated.
10	**MATRIX**	**Message window/ Performance profile**	Displays messages, programme parameters, and performance profiles.

3.2 Button Functions

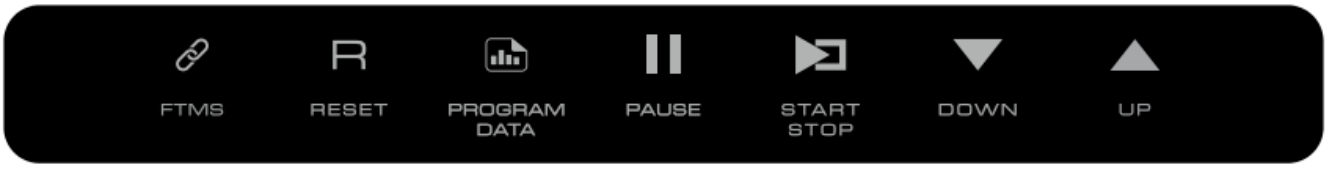

DISPLAY	BUTTON	FUNCTION
FTMS	**FTMS**	Establish an FTMS or a wireless connection with your mobile device.
RESET	**RESET**	+ Reset the entered value. + Return to standby when you are in the training overview.
PROGRAM DATA	**PROGRAM DATA**	+ Select a training programme. + Switch the displayed data during training.
PAUSE	**PAUSE**	Pause the training session.
START STOP	**START/STOP**	+ Start a training session. + Stop the active training session.

	DOWN	+ Navigate down in a selection. + Decrease the level during training. + Decrease a value.
	UP	+ Navigate up in a selection. + Increase the level during training. + Increase a value.

3.3 Display Modes

The following table provides an overview of the various display modes of the console.

MODE	FUNCTION
STANDBY MODE	+ No training programme is in use. All values display **0**. + After 5 minutes of inactivity in training mode, the console enters standby mode. + Choose a training programme.
SLEEP MODE	+ This is the sleep mode that the console enters after 5 minutes of inactivity in standby mode. + The console is not lit up and no data is displayed. + To exit sleep mode, press any button on the device.
TRAINING MODE	+ This display appears during the training session. + Your training data is displayed in training mode. + The displayed data switches every 5 seconds. + Complete/Stop the training session to enter standby mode.
PAUSE MODE	+ This display appears in pause mode. + To exit pause mode, continue your training.
TRAINING OVERVIEW	+ Displays an overview of your training data. + After 5 minutes of inactivity in training mode, the console enters standby mode.

3.4 Displayed Values

This chapter provides a description of the displayed values on the console.

VALUE	DESCRIPTION
WATT	+ Displays the current power output. + Displays the training intensity – regardless of the cadence or resistance combination.
RPM	RPM (revolutions per minute) indicates the cadence – the number of pedal revolutions completed per minute.

Alternating the displayed values:

ⓘ **NOTICE**
The following data is displayed in training mode:

+ **DIST./LEVEL/SPEED** & **CAL./WATT/RPM**
+ To switch the display, press PROGRAM DATA.

3.5 Training Programmes

Your device offers a selection of training programmes to help you achieve your training goals. The following training programmes can be accessed:

PROGRAMME	DESCRIPTION	QUANTITY
QUICK START	Manual training without preset settings.	1
TARGET PROGRAMMES	Set a target value for your training session. The selected value starts to count down.	3
HEART RATE CONTROLLED PROGRAMMES	The level is set according to your target heart rate.	3
PRESET PROGRAMMES	Training with preset profiles. Adjust the training data in advance, if desired.	30
TARGET-WATT PROGRAMME	The level is set automatically based on your cadence, so a certain watt value can be reached.	1
USER-DEFINED PROGRAMMES	Create a personal training programme.	2

In the following subchapters you will find detailed descriptions of the training programmes.

3.5.1 Quick Start

To start a training session without preset settings, select quick start.

Starting the programme:

1. Press START/STOP in standby mode.

Time counts up.

2. Set your desired level with ^/v.

ⓘ **NOTICE**
Switch the displayed data with PROGRAM DATA.

3. To pause the training session, press PAUSE.

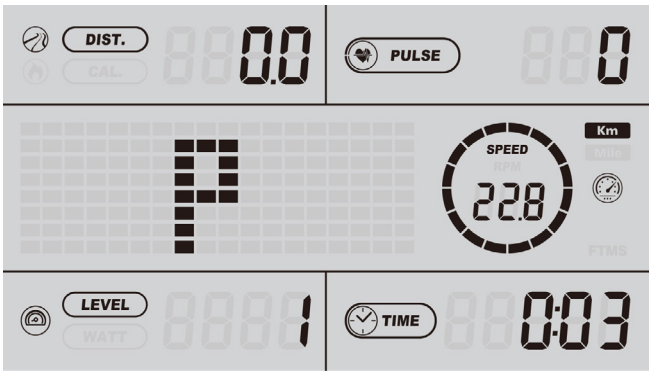

4. To continue the training session, press START/STOP.
5. To end the training session, press START/STOP in training mode.

→ ***The console has entered standby mode.***

3.5.2 Preset Programmes

To start a training session with presets, select one of the 30 preset programmes. Without a set training time, each training segment lasts one minute. If you set the time, it is divided by 18 and displayed by the segments.

Starting the programme:

1. Press PROGRAM DATA in standby mode.
2. Select one of the programmes P01–P30 with ^/v.

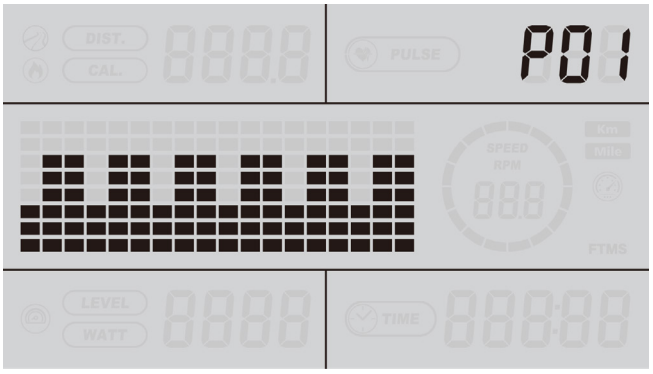

ⓘ **NOTICE**

+ To exit the programme setting and return to standby mode, you can press RESET at any given moment.
+ Skip the programme setting or values by pressing PROGRAM DATA.
+ To start the programme immediately, press START/STOP.

3. To enter the programme settings, press PROGRAM DATA.

AGE appears in the message window.

4. To set your age, press ^/v.
5. To confirm your setting, press PROGRAM DATA.

WEIGHT appears in the message window.

6. To set your weight, press ^/v.
7. To confirm your setting, press PROGRAM DATA.

TIME appears in the message window.

8. To set your training time, press ^/v.

9. To confirm your setting and start the programme, press START/STOP or to edit the programme settings, press PROGRAM DATA.

The programme starts.

10. To pause the training session, press PAUSE.
11. To continue the training session, press START/STOP.
12. To end the training session, press START/STOP in training mode.
13. If the set time has been reached, a signal sounds.

END appears in the message window.

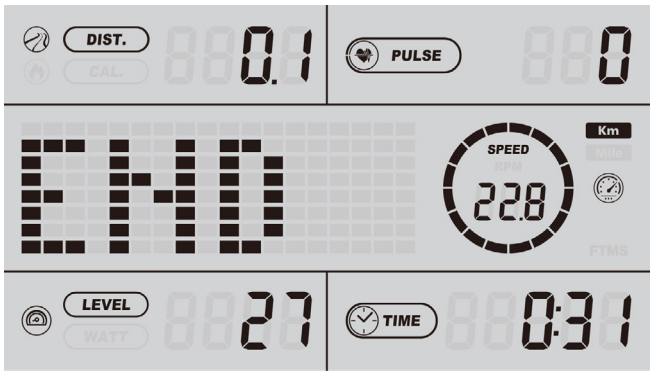

→ ***The training overview displays your training data.***

3.5.3 Target Programmes

To start a training session with target values, select one of the three target programmes.

Starting the programme:

1. Press PROGRAM DATA in standby mode.
2. Select the programme P00 with ^/v.

ⓘ **NOTICE**

+ To exit the programme setting and return to standby mode, you can press RESET at any given moment.
+ Skip the programme setting or values by pressing PROGRAM DATA.
+ To start the programme immediately, press START/STOP.

3. To enter the programme settings, press PROGRAM DATA.

AGE appears in the message window.

4. To set your age, press ^/v.
5. To confirm your setting, press PROGRAM DATA.

WEIGHT appears in the message window.

6. To set your weight, press ^/v.
7. To confirm your setting, press PROGRAM DATA.

TIME appears in the message window.

8. To set your training time, press ^/v.

8.1. If you do not want to set a target time, set the value to 0 and press PROGRAM DATA.

DISTANCE appears in the message window.

9. To set your target distance, press ^/v.

9.1. If you do not want to set a target distance, set the value to 0 and press PROGRAM DATA.

CALORIE appears in the message window.

10. To set your calorie target, press ^/v.

10.1. If you do not want to set a calorie target, set the value to 0.

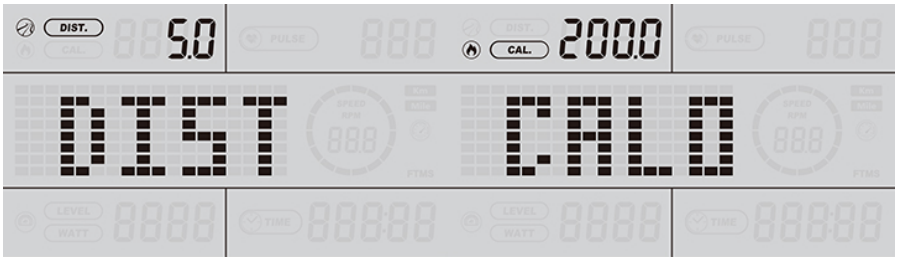

11. To confirm your setting and start the programme, press START/STOP or to edit the programme settings, press PROGRAM DATA.

The programme starts.

12. Set your training resistance.
13. To pause the training session, press PAUSE.
14. To continue the training session, press START/STOP.
15. To end the training session, press START/STOP in training mode.
16. If the set time has been reached, a signal sounds.

END appears in the message window.

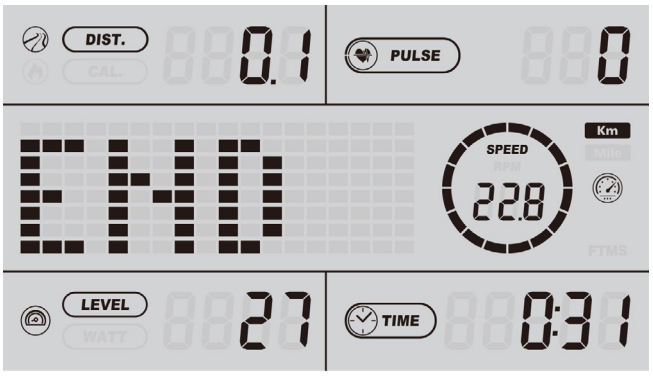

→ ***The training overview displays your training data.***

3.5.4 Target-Watt Programme

In the target-watt programme you train with a constant power output. The device automatically adjusts the resistance to keep the set watt target as constant as possible, regardless of cadence.

Starting the programme:

1. Press PROGRAM DATA in standby mode.
2. Select the programme WATT with ^/v.

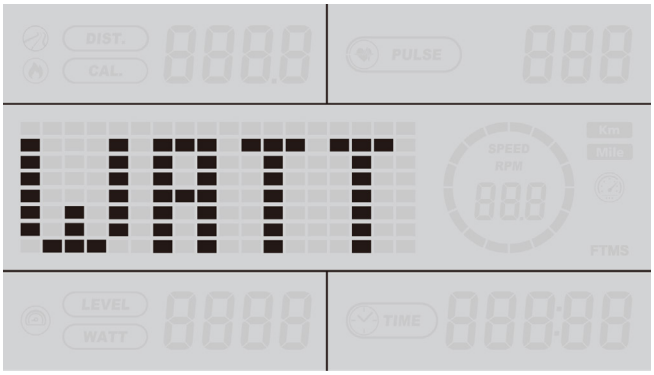

ⓘ **NOTICE**

+ To exit the programme setting and return to standby mode, you can press RESET at any given moment.
+ Skip the programme setting or values by pressing PROGRAM DATA.
+ To start the programme immediately, press START/STOP.

3. To enter the programme settings, press PROGRAM DATA.

MALE/FEMALE appears in the message window.

4. To set your gender, press ^/v.
5. To confirm your setting, press PROGRAM DATA.

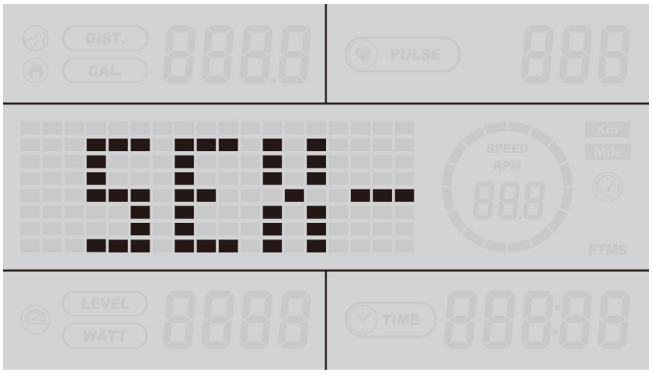

AGE appears in the message window.

6. To set your age, press ^/v.
7. To confirm your setting, press PROGRAM DATA.

WEIGHT appears in the message window.

8. To set your weight, press ^/v.
9. To confirm your setting, press PROGRAM DATA.

TIME appears in the message window.

10. To set your training time, press ^/v.

10.1. If you do not want to set a target time, set the value to 0 and press PROGRAM DATA.

TARGET WATT appears in the message window.

11. To set your target watt, press ^/v.
12. To confirm your setting and start the programme, press START/STOP or to edit the programme settings, press PROGRAM DATA.

The programme starts.

ⓘ **NOTICE**
The device automatically adjusts the resistance to achieve the set target watt and maintain it as consistently as possible.

13. To pause the training session, press PAUSE.
14. To continue the training session, press START/STOP.
15. To end the training session, press START/STOP in training mode.
16. If the set time is reached, a signal sounds.

END appears in the message window.

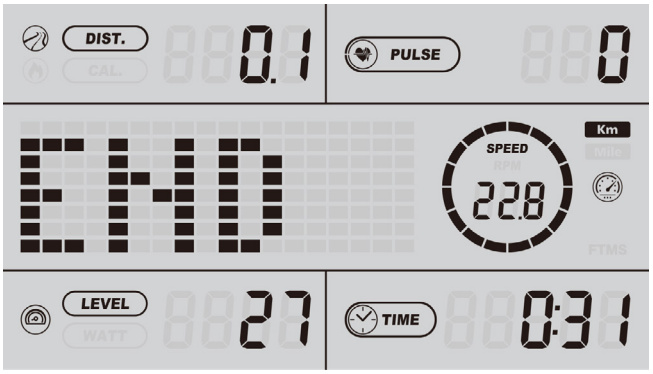

→ ***The training overview displays your training data.***

3.5.5 Heart Rate Controlled Programmes

⚠ **WARNING**

Your training equipment is not a medical device. The heart rate measurement of this equipment may be inaccurate. Various factors can affect the accuracy of the heart rate measurement. The heart rate measurement serves only as a training aid.

With the heart rate programmes, you train based on your heart rate. The level is automatically adjusted to maintain the target heart rate. You can choose between three programmes:

+ HRC1: 60 % of the target pulse
+ HRC2: 75 % of the target pulse
+ HRC3: 85 % of the target pulse

Starting the programme:

1. Press PROGRAM DATA in standby mode.
2. To select between the programmes H01-H03, press ^/v.

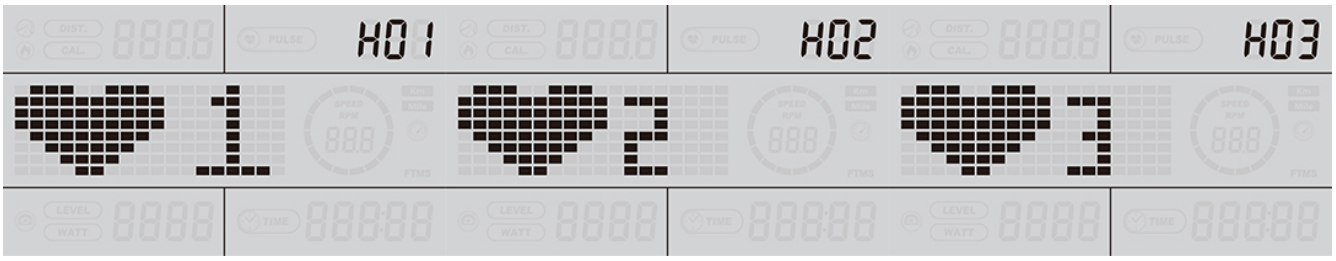

ⓘ **NOTICE**

+ To exit the programme setting and return to standby mode, you can press RESET at any given moment.
+ Skip the programme setting or values by pressing PROGRAM DATA.
+ To start the programme immediately, press START/STOP.

3. To enter the programme settings, press PROGRAM DATA.

AGE appears in the message window.

4. To set your age, press ^/v.
5. To confirm your setting, press PROGRAM DATA.

WEIGHT appears in the message window.

6. To set your weight, press ^/v.
7. To confirm your setting, press PROGRAM DATA.

TIME appears in the message window.

8. To set your training time, press ^/v.

8.1. If you do not want to set a target time, set the value to 0 and press PROGRAM DATA.

THR appears in the message window.

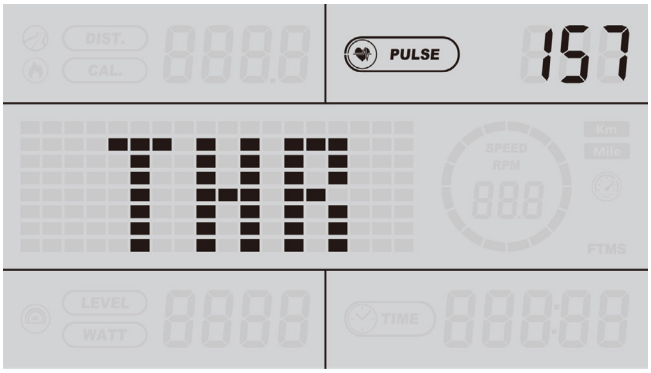

9. To set your target heart rate, press ^/v.
10. To start the programme, press START/STOP or press PROGRAM DATA to set the settings again.

The training session starts with the lowest resistance.

The resistance is automatically adjusted throughout the training session to ensure that the set target heart rate is maintained.

11. To adjust the target heart rate during the training session, press ^/v.

ⓘ **NOTICE**
The heart rate controlled programme can be started without a heart rate signal. If no heart rate signal is detected within a short time, the device automatically ends the training session.

12. To pause the training session, press PAUSE.
13. To continue the training session, press START/STOP.
14. To end the training session, press START/STOP in training mode.
15. If the set time has been reached, a signal sounds.

END appears in the message window.

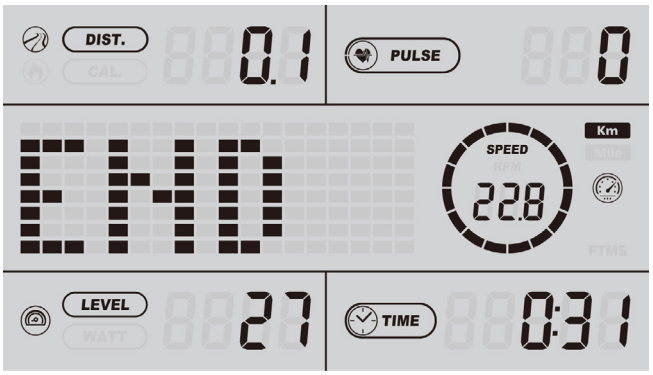

→ ***The training overview displays your training data.***

3.5.6 User-Defined Programmes

The user-programmes allow you to create and save individual training profiles. The device offers two user-programmes.

Starting the programme:

1. Press PROGRAM DATA in standby mode.
2. To select between the programmes U01-U02, press ^/v.

ⓘ **NOTICE**

+ To exit the programme setting and return to standby mode, you can press RESET at any given moment.
+ Skip the programme setting or values by pressing PROGRAM DATA.
+ To start the programme immediately, press START/STOP.

3. To enter the programme settings, press PROGRAM DATA.

AGE appears in the message window.

4. To set your age, press ^/v.
5. To confirm your setting, press PROGRAM DATA.

WEIGHT appears in the message window.

6. To set your weight, press ^/v.
7. To confirm your setting, press PROGRAM DATA.

TIME appears in the message window.

8. To set your training time, press ^/v.

8.1. If you do not want to set a target time, set the value to 0 and press PROGRAM DATA.

LEVEL appears in the message window.

9. Set the resistance for each segment with ^/v.
10. Confirm the segment with PROGRAM DATA.
11. To confirm your setting and start the programme, press START/STOP or to edit the programme settings, press PROGRAM DATA.

ⓘ **NOTICE**

+ The set resistance profile is saved and remains stored until it is changed again.
+ The training session consists of multiple consecutive segments using the resistance levels you set.

12. To adjust the resistance during the training session, press ^/v.
13. To pause the training session, press PAUSE.
14. To continue the training session, press START/STOP.
15. To end the training session, press START/STOP in training mode.

END appears in the message window.

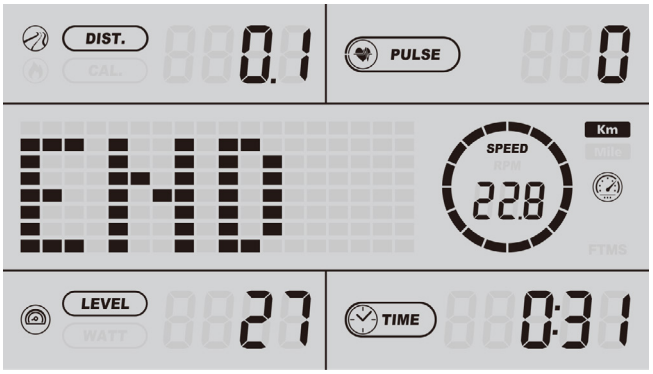

→ ***The training overview displays your training data.***

3.6 Training Overview

The following data is displayed in the training overview:

ⓘ **NOTICE**

+ The training overview is displayed only after a programme has reached a target value or the set time. If a programme is stopped prior to reaching one of the values, you will be redirected to standby mode.
+ To exit the training overview, press RESET.

DISPLAY	DESCRIPTION	FUNCTION
DIST.	**Distance**	Displays the training distance.
PULSE	**Pulse**	Displays the average pulse.
SPEED	**Speed**	Displays the average speed.

WATT	**Watt**	Displays your generated watt input.
TIME	**Time**	Displays the trained time.
LEVEL	**Level**	Displays the average resistance level.
CAL.	**Calories**	Displays the burned calories.

3.7 USB-C Connection

ⓘ **NOTICE**

+ You can plug your mobile device into the console to charge your device.
+ You need a USB-C cable. (Not included)

3.8 Watt Table

This table provides an overview of the generated watt values in relation to the resistance and cadence.

RESISTANCE/RPM	20	30	40	50	60	70	80	90	100	110	120
Level 1	6	11	18	25	30	42	52	63	73	84	94
Level 2	7	13	21	30	37	51	63	77	89	103	115
Level 3	8	15	25	35	44	60	75	91	106	121	136
Level 4	9	17	28	41	51	70	87	104	122	140	157
Level 5	10	19	32	46	58	79	98	118	138	158	177
Level 6	11	21	35	51	65	88	110	132	154	177	198
Level 7	12	23	39	56	72	98	121	146	170	195	219
Level 8	13	25	42	61	79	107	133	160	186	214	240
Level 9	14	27	46	66	86	116	144	173	202	232	260
Level 10	14	29	49	71	93	125	156	187	219	251	281
Level 11	15	31	53	77	100	135	168	201	235	269	302
Level 12	16	33	56	82	107	144	179	215	251	288	323
Level 13	17	35	60	87	114	153	191	228	267	306	344
Level 14	18	37	63	92	121	163	202	242	283	325	364
Level 15	19	39	67	97	128	172	214	256	299	343	385
Level 16	20	41	70	102	135	181	225	270	315	362	406
Level 17	21	43	74	108	142	190	237	283	332	380	427
Level 18	22	46	77	113	149	200	248	297	348	399	447
Level 19	23	48	80	118	156	209	260	311	364	417	468
Level 20	24	50	84	123	163	218	272	325	380	436	489
Level 21	25	52	87	128	170	228	283	339	396	454	510
Level 22	26	54	91	133	177	237	295	352	412	473	531
Level 23	27	56	94	138	184	246	306	366	428	491	551
Level 24	27	58	98	144	191	255	318	380	444	510	572
Level 25	28	60	101	149	198	265	329	394	461	529	593
Level 26	29	62	105	154	205	274	341	407	477	547	614
Level 27	30	64	108	159	212	283	352	421	493	566	634
Level 28	31	66	112	164	219	293	364	435	509	584	655
Level 29	32	68	115	169	226	302	376	449	525	603	676
Level 30	33	70	119	174	234	311	387	462	541	621	697
Level 31	34	72	122	180	242	320	399	476	557	640	718
Level 32	35	74	126	185	250	330	410	490	574	658	739

4.1 General Instructions

When training, it is important to perform the exercises correctly in order to avoid injuries and achieve the desired training effect. Make sure you use the correct technique and train at an appropriate intensity level. Always consult an expert such as a trainer or doctor if you are unsure or have health problems. Always start your training with a low load and increase it evenly and gently.
End your training with a cool-down phase. If you have any questions or uncertainties, contact your doctor.

4.1.1 Training clothes

During training, wear appropriate sports clothing that is comfortable and breathable. Avoid clothing that restricts you or is uncomfortable. Make sure that your shoes are suitable and offer you sufficient support. In addition, always carry a towel with you to wipe away sweat and keep the equipment clean.

4.1.2 Warming up and stretching

It is important to warm up and stretch properly before training to avoid injury and improve performance. Stretching helps to loosen muscles and improve flexibility. Be sure to incorporate a short stretching routine before each workout.

Warm-up exercise:

1. Stand upright with your feet about shoulder-width apart.
2. Start with gentle arm circles by slowly moving your arms forwards in small circles in a controlled manner.
3. Perform arm circles backwards to loosen your shoulders and arms.
4. Do squats by slowly squatting down and then straightening up again. Make sure that your knees do not extend beyond your toes.

⚠ **CAUTION**
Do not exercise with sore muscles or take it easy on the affected muscles, as this can lead to injuries.

4.1.3 Medication

If you regularly take medication and want to exercise, it is important to be aware of possible side effects. Ask your doctor whether your medication affects your workout.

4.1.4 Used muscle groups

This training uses the following muscle groups:

+ Gluteal muscle
+ Leg muscles

Make sure you keep your back straight during training. Do not hunch over and do not arch your back.

4.1.5 Exercise frequency

Regular exercise is crucial to making progress and staying healthy in the long term. Continuous exercise can strengthen muscles, improve endurance and enhance overall well-being. Remember that even small workouts can be done regularly to achieve long-term results.

Training with heart rate orientation
Heart rate orientation guarantees an extremely effective and healthy training. Through your age and the following table, you can quickly and easily read and determine the optimal pulse for your training. An acoustic alarm will sound if your heart rate exceeds the set target heart rate. Which target heart rate is important for which training goal can be found out in the following.

Fat burning (weight management): The main goal here is to burn deposits of fat. In order to achieve this training goal, a low training intensity (approximately 55% of the maximum heart rate) and a longer training period are required.

Cardiovascular training (cardio training): The primary goal is to increase stamina and fitness through an improved provision of oxygen through the cardiovascular system. In order to achieve this training goal, medium intensity (approximately 75% of the maximum heart rate) with a medium training period is required.

Anaerobic (maximum) load training: The main goal of maximum load training is to improve recovery after short, intense loads in order to be able to quickly return to the aerobic zone. In order to achieve this training goal, a high intensity (approximately 90% of the maximum heart rate) with short, intense load is required, which is followed by a recovery phase in order to prevent muscle fatigue.

Example:
For a 45-year-old man, the maximum heart rate is 175 (220 - 45 = 175).

+ The fat burning target zone (55%) is at approximately 96 beats/min. = (220 - age) x 0.55.
+ The cardio target zone (75%) is at approximately 131 beats/min. = (220 - age) x 0.75.
+ The maximum heart rate for an anaerobic load training (90%) is at approximately 157 beats/min. = (220 - age) x 0.9.

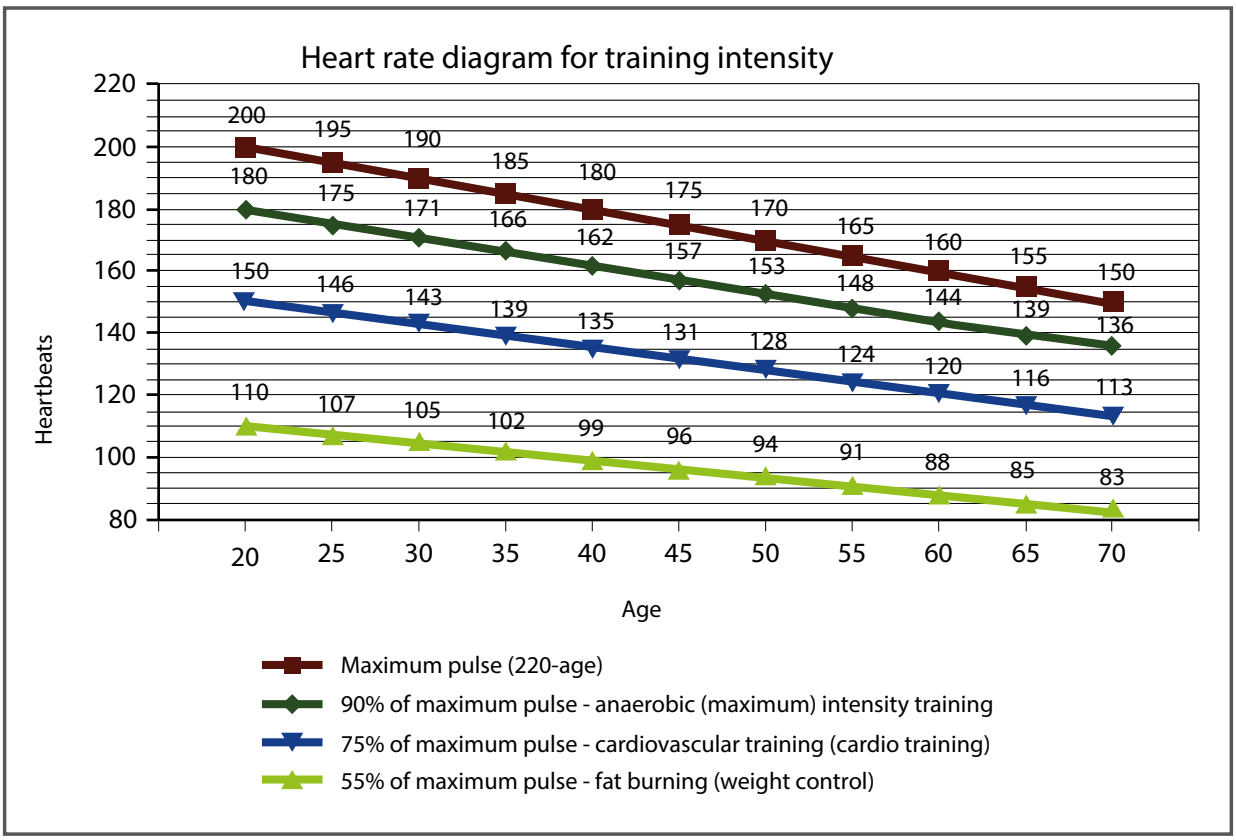

4.2 Workout journal

(Copy template)

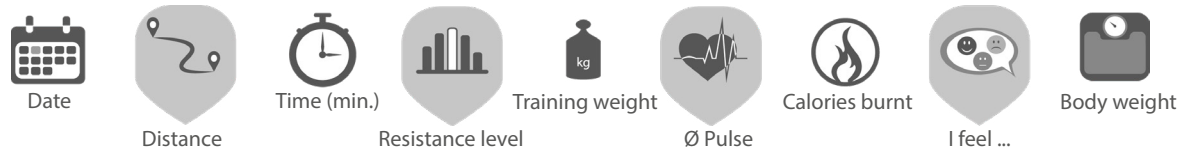

4.3 Wireless Connection and Fitness Apps

This console is equipped with a wireless interface. Please take note that your mobile device needs to be compatible with the wireless interface of the treadmill.

To use training apps you will have to activate the wireless connection function on your mobile device (tablet or smart phone) and start the fitness app. Select your fitness equipment. Please follow the instructions given in the app. You will find the name of your fitness euqipment on a small sticker on the back of the console.

You will find the fitness apps in the app stores of Google or Apple. There you will find the apps "Kinomap" or "Zwift". Please note that these apps are produced by an external manufacturer. Fitshop does not take any responsibility regarding the availability, functionality or contents of these programmes.

ⓘ IMPORTANT NOTE

Some entertainment apps are provided and maintained by third-party providers. Pre-installed apps may change, be updated, or be removed over time. These changes are normal and do not affect your statutory warranty rights. To make sure the pre-installed apps are working correctly, they must be updated regularly. If needed, the respective app will notify you to do so. To update the app, you need a google account. A google email is sufficient. Just follow the instructions on the screen to perform the update. Please note: The system is set up only for the pre-installed apps. Do not install any additional apps as their proper functionality can not be guaranteed. The installation of other apps might cause technical issues.

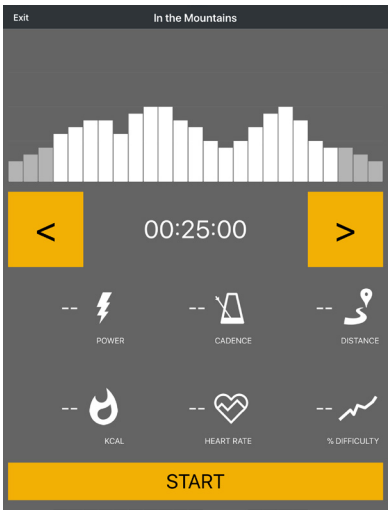

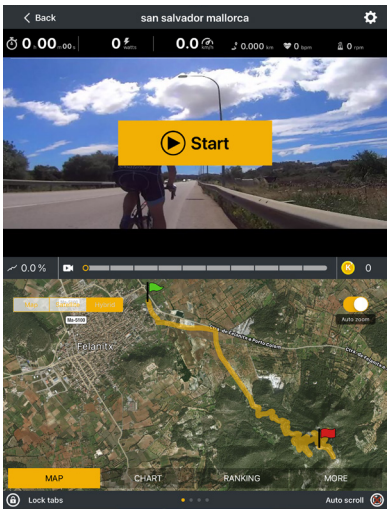

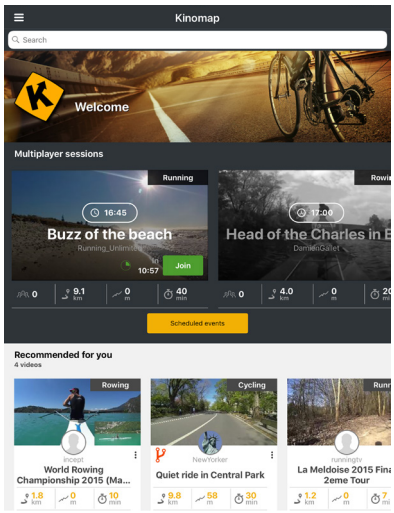

Example: Kinomap

5.1 General Instructions

⚠ **WARNING**

+ The storage location should be chosen so that improper use by third parties or children can be prevented.
+ If your equipment does not have transportation wheels, the equipment must be disassembled before transportation.

▶ **ATTENTION**

+ Make sure that the equipment is protected from moisture, dust and dirt in the selected storage location. The storage location should be dry and well ventilated and have a constant ambient temperature between 10°C and 35°C.

5.2 Transportation Wheels

▶ **ATTENTION**

If you want to transport your equipment over particularly sensitive and soft floor coverings, such as parquet, planks or laminate, lay out the transport route with cardboard or similar to avoid possible floor damage.

1. Stand behind the equipment and lift it until the weight is transferred to the transportation wheels. After that, you easily can move the equipment to a new position. For long transport distances the equipment should be disassembled and safely packed.
2. Select the new location by following the instructions in the section 1.5 of this manual.

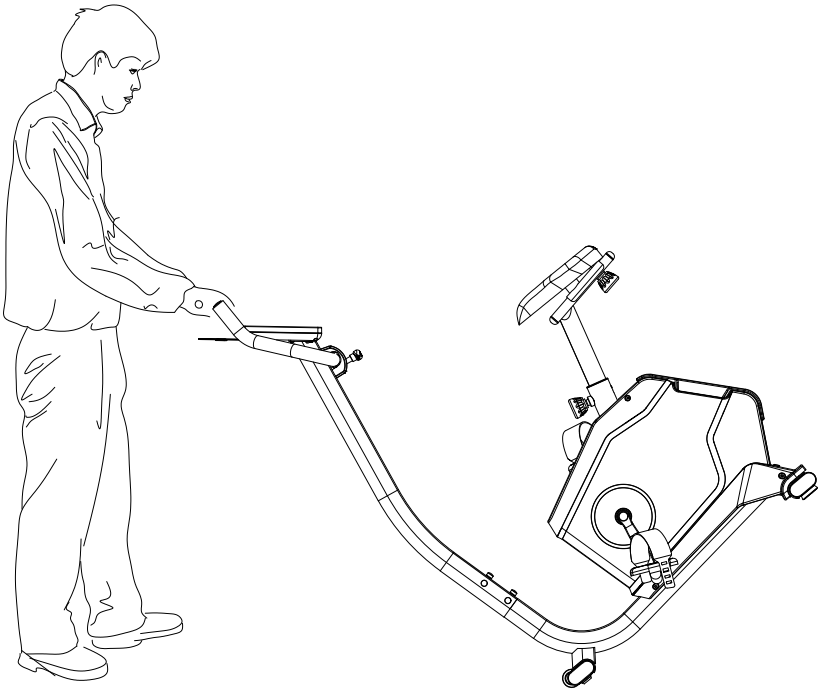

6.1 General Instructions

⚠ **WARNING**

+ Do not make any improper changes to the equipment.

⚠ **CAUTION**

+ Damaged or worn components may affect your safety and the life of the equipment. Therefore, immediately replace damaged or worn components. In such a case, contact the contract partner. The equipment must not be used until it has been repaired. If necessary, use only original spare parts.

▶ **ATTENTION**

+ In addition to the instructions and recommendations for maintenance and care given here, additional service and/or repair work may be necessary; this must only be carried out by authorised service technicians.

6.2 Faults and Fault Diagnosis

The equipment undergoes regular quality controls during production. Nevertheless, faults or malfunctions may occur. Frequently, individual parts are responsible for these disturbances, an exchange is usually sufficient. Please refer to the following overview for the most common errors and how to correct them. If the equipment still does not function properly, contact your contract partner.

Fault	Cause	Solution
Cracking in the pedal area	Pedals loose	Tighten the pedals
Equipment wobbles	Equipment is not level	Align the feet
Handlebar/saddle wobbles	Loose screws	Tighten screws firmly
Display is blank/is not working	Batteries empty or loose cable connection	Replace batteries or check cable connections
No pulse display	+ Sources of interference in the room + unsuitable chest strap + Wrong position of chest strap + Chest strap defective or battery empty + Pulse display defective	+ Eliminate sources of interference (e.g. mobile phone, WLAN, lawn mower and vacuum cleaner robot, etc. ...) + Use a suitable chest strap (see RECOMMENDED ACCESSORIES) + Reposition chest strap and/or moisten electrodes + Changing batteries + Check if pulse display by hand pulse possible

6.3 Error Codes and Troubleshooting

The electronics of the equipment continuously carries out tests. In case of deviations, an error code appears on the display and normal operation is stopped for your safety.

Please contact the contract partner for technical support.

6.4 Maintenance and Inspection Calendar

To avoid damage from body sweat, the equipment must be cleaned with a damp towel (no solvents!) after each training session.

The following routine tasks must be performed at the specified intervals:

Part	Weekly	Monthly
Display console	C	I
Plastic covers	C	I
Screws and cable connections		I
Check pedals for tightness		I
Legend: C = clean; I = inspect		

By scanning the QR-code with the camera function or QR-code scanner app of your smartphone/tablet, a video on general maintenance of an exercise bike opens on YouTube. The video serves to illustrate the maintenance points described in this manual.

Please note that the video may not be available in your language or with appropriate subtitles.

If you cannot scan QR-codes, you can access all Fitshop videos on YouTube by first opening YouTube and entering "Fitshop" in the search field.

7 DISPOSAL

At the end of its operational life, this equipment cannot be disposed of in normal household waste. Instead, it must be disposed of via an electricals recycling centre. Further information can be obtained from your local authority's recycling service.

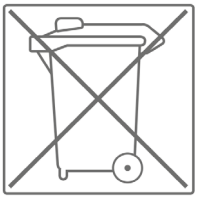

The materials can be recycled as per their symbols. Through the reuse, recycling of materials or other forms of recovery of old equipment, you make an important contribution to the protection of the environment.

8 RECOMMENDED ACCESSORIES

To make your training experience even more efficient and pleasant, we recommend that you add suiting accessories to your fitness equipment. For elliptical cross trainers this could for example be a **floor mat**, which makes your fitness equipment stand more securely and also protects the floor from sweat or **silicone spray** to keep moving parts in good shape.

If you have purchased a fitness machine with pulse training and want to train your heart rate, we strongly recommend that you use a compatible **chest strap**, as this ensures optimum transmission of the heart rate.

Our range of accessories offers the highest quality and makes training even better. If you would like to find out more about compatible accessories, please go to the detail page of the product in our webshop (the easiest way is to enter the article number in the search field above) and go to the recommended accessories on this page. Of course, you can also contact our customer service: by telephone, e-mail, in one of our branches or via our social media channels. We will be happy to advise you!

chest strap

floor mat

lubricant

9.1 Serial Number and Model Name

In order to provide you with the best possible service, please have the model name, article number, serial number, exploded drawing and parts list ready. The corresponding contact options can be found in chapter 11 of this operating manual.

ⓘ **NOTICE**
The serial number of your equipment is unique. It's located on a white sticker. The exact position of this sticker is shown in the following illustration.

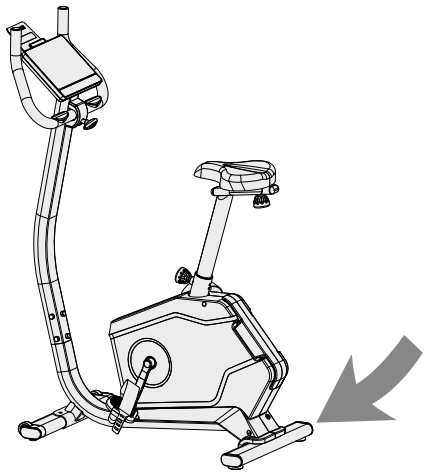

Enter the serial number in the appropriate field.

Serial number:

Brand / Category:

BodyMax / Exercise bike

Model Name:

UC200

SKU:

BM-UC200

9.2 Parts List

No.	Name	Supplier Parts No.	Qty.
A	Computer set		1
A-1	Computer	75700-6-2501-B1	1
A-2	Bolt M5x0.8x10L	52605-2-0010-F0	4
B	Handlebar complete assembly		1
B-1	Handlebar welding set	75700-6-2401-N0	1
B-2	Foam	58015-6-1452-B1	2
B-3	Cap	553D7-1-0017-B1	2
B-4	Hand pulse cable 300L	75402-6-2479-00	2
B-5	Handle pulse	16800-6-2478-00	2
B-6	Screw ST4x1.41x20L	50904-2-0020-D0	2
C	Handlebar post complete assembly		1
C-1	Handlebar post welding set	75700-3-2000-J1	1
C-2	Upper computer cable 1000L	75700-6-2572-01	1
D	Main frame set		1
D-1	Main frame	75700-3-1000-J1	1
D-2	Bearing 6003-2RS	58006-6-1018-01	2
D-3	Knob D54*M16*1.5*26*D8	75402-6-1072-B0	1
D-4	Inner sleeve	75700-6-1071-B0	1
D-5	Lower computer cable 700L	75402-6-2573-01	1
D-6	Power cable 600L	75402-6-2596-00	1
D-7	Sensor cable 200L	75402-6-2576-00	1
D-8	Screw ST4*1.41*13L,D10	54704-2-0013-F0	1
D-9	Motor	75402-6-2571-00	1
D-10	Tension cable D1.2*350L	75402-6-2601-00	1
D-11	Screw ST4.2*15L	52842-2-0015-F0	3
D-12	Screw M6*1*12L	54806-2-0012-N0	1
E	Seat post assembly set		1
E-1	Seat post	75700-3-2200-J0	1
E-2	Cap	55328-3-2550-B1	2
F	Front stabilizer assembly set		1
F-1	Front stabilizer	75402-6-2101-J0	1

F-2	Front left foot cap set	75402-6-2185-B1	1
F-3	Front right foot cap set	75402-6-2195-B1	1
G	Rear stabilizer assembly set		1
G-1	Rear stabilizer	75402-6-2107-J0	1
G-2	Oval cap 40*80*33	55333-3-4080-B8	2
G-3	Adjustable wheel	76100-6-2174-B0	2
H	Pedal set		1
H-1	Left Pedal	58029-6-1171-B0-L	1
H-2	Right Pedal	58029-6-1171-B0-R	1
H-3	Left Pedal Strap	58029-6-1171-00-L	1
H-4	Right Pedal Strap	58029-6-1171-00-R	1
I	Crank set		1
I-1	Left crank	58007-6-1103-D0	1
I-2	Right crank	58007-6-1104-D0	1
I-3	Anti-loosen nut M10*1.25*10T	70501-6-2775-N0	2
I-4	Screw cover	81502-6-2779-B0	2
J	Chain cover set		1
J-1	Left chain cover	75700-6-4501-B0	1
J-2	Right chain cover	75700-6-4502-B0	1
J-3	Gasket	67900-6-4503-B0	1
J-4	Pin	71600-6-4586-60	10
D-11	Screw ST4.2*15L	52842-2-0015-F0	5
K	Seat		1
K-1	Seat	58001-6-1042-B2	1
K-2	Flat washer D16xD8.5x1.2T	55108-1-1612-NA	3
K-3	Nylon nut M8*1.25*8T	55208-1-2008-NA	3
L	Idle wheel fixing plate set		1
L-1	Fixing plate of idle wheel	706MB-6-1601-N0	1
L-2	Bolt M10*35L	50310-5-0035-C3	1
L-3	Bushing D13.5*D10*9T	58002-6-1081-01	1
L-4	Idle wheel	745S0-6-1671-00	1
L-5	Nylon nut M10x1.5x10T	55210-1-2010-CA	1
L-6	Bolt M8*1.25*30L	50108-5-0030-C4	1
L-7	Plastic washer D10*D24*0.4T	55110-1-2404-BF	1

L-8	Flat washer D30*D8.5*2.0T	55108-1-3020-NA	1
L-9	Hex nut M8*1.25*6T	55208-2-2006-NA	1
L-10	Spring D2.2*D14*65L	58003-6-1024-N1	1
L-11	Plastic washer D50*D10*1.0T	55110-1-5010-BF	1
K-3	Nylon nut M8*1.25*8T	55208-1-2008-NA	1
M	Belt wheel set		1
M-1	Crank axle welding set	75402-3-2903-00	1
M-2	Belt wheel	58008-6-1012-05	1
M-3	Spacer D22.5*D17.2*6.4T	80700-6-2781-00	1
M-4	Waved washer D22xD17x0.3T	55117-5-2203-DA	2
M-5	Flat washer D23*D17.2*1.5T	55117-1-2315-NA	1
M-6	C ring S-17(1T)	55517-1-0010-00	1
M-7	Belt (PJ5) 430(1092)	58004-6-1038-00	1
M-8	Bolt M6x1.0x15L	50106-5-0015-C0	4
M-9	Nylon nut M6x1.0x6T	55206-1-2006-CA	4
M-10	Magnet	742G0-6-2574-00	1
N	Assembly kit	75700-3-5100-00	1
N-1	Bolt M8x1.25x20L	75402-6-3191-F0	6
N-2	Screw cover	75402-6-2779-B0	6
N-3	Bolt M8*1.25*55L	50108-2-0055-F3	2
N-4	Bolt M8*1.25*55L	50508-5-0055-F3	2
N-5	Flat washer D25*D10*2.0T	55110-1-2520-FA	2
N-6	Flat washer D16xD8.5x1.2T	55108-1-1612-FA	2
N-7	Spring washer D15.4xD8.2x2T	55108-2-1520-FA	4
N-8	Domed nut M8x1.25x15L	55208-6-2015-FA	2
N-9	Flat washer D25*D8.5*2T	55108-1-2520-FA	2
N-10	Knob M8x1.25x69L	75700-6-2279-B0	1
N-11	Hex wrench M6	58030-6-1031-N1	1
N-12	Open wrench 153*6.5T	58030-6-1050-C0	1
O	Seat adjustment set		1
O-1	Seat adjustment set	70104-3-4000-J0	1
O-2	Flat washer D28*D8.5*3T	55108-1-2830-FA	1
O-3	Knob	75402-6-2279-B0	1
P	Handlebar cover	75700--6-3781-B0	1

Q	Flywheel set		1
Q-1	Flywheel	81000-6-3101-00	1
Q-2	Small flywheel	801B2-6-3173-01	1
Q-3	Flywheel axle	808A1-6-3171-00	1
Q-4	C ring S-10(1T)	55510-1-0010-00	1
Q-5	Fixed ring D13*D10*1.9T	71600-6-3178-B0	1
Q-6	Hex nut D9.5x8T	55295-2-3008-NA	1
Q-7	Hex nut D9.5x4T	55295-2-3004-NA	1
Q-8	Anti-loosen nut 3/8"-26UNFx6.5T	18600-6-3175-N1	2
R	Pad holder Set		
R-1	Pad holder	75402-6-2466-J0	1
R-2	Buffer strip 1	75402-6-2088-B0	1
R-3	Buffer strip 2	75402-6-2089-B0	1
U	Adaptor OUTPUT:9VM 1.5A	75700-6-2584-00	1
V	Magnet Fixing plate set		1
V-1	Fixing plate for the magnet	70702-3-3200-J1	1
V-2	Magnet grid	58020-6-1003-M0	6
V-3	Magnet	58009-6-1007-01	7
V-4	Spring D1.0*55L	58003-6-1054-N0	1
V-5	Bolt M6*65L	50106-5-0065-N0	1
V-6	Nylon washer D6*D19*1.5T	55106-1-1915-B1	2
V-7	Hex nut M6*1*6T	55206-2-2006-NA	1
V-8	Nylon nut M6*1*6T	55206-1-2006-NA	1
V-9	Bolt M8*52L	50108-5-0052-N3	1
K-3	Nylon nut M8*1.25*8T	55208-1-2008-NA	1

9.3 Exploded Drawing

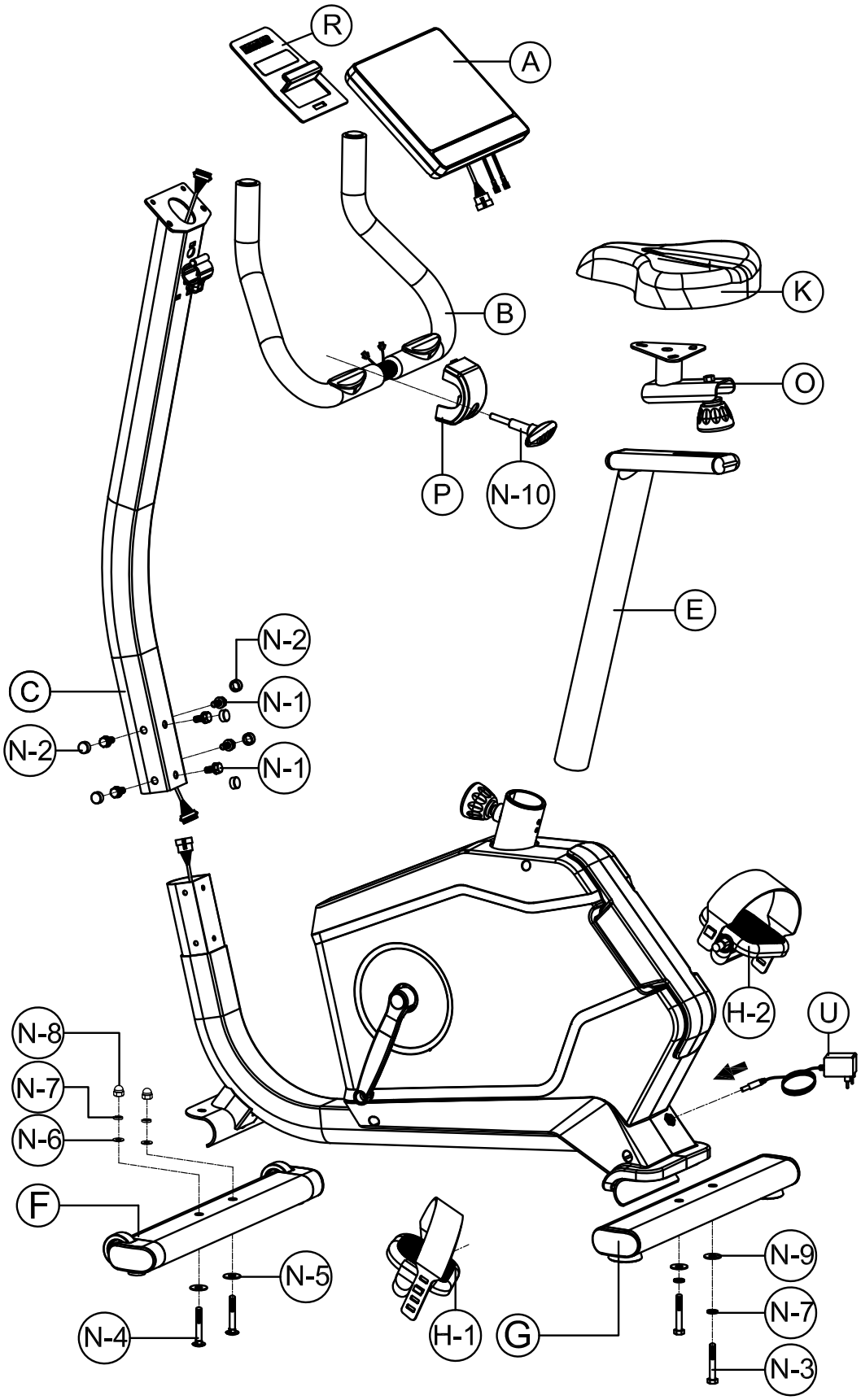

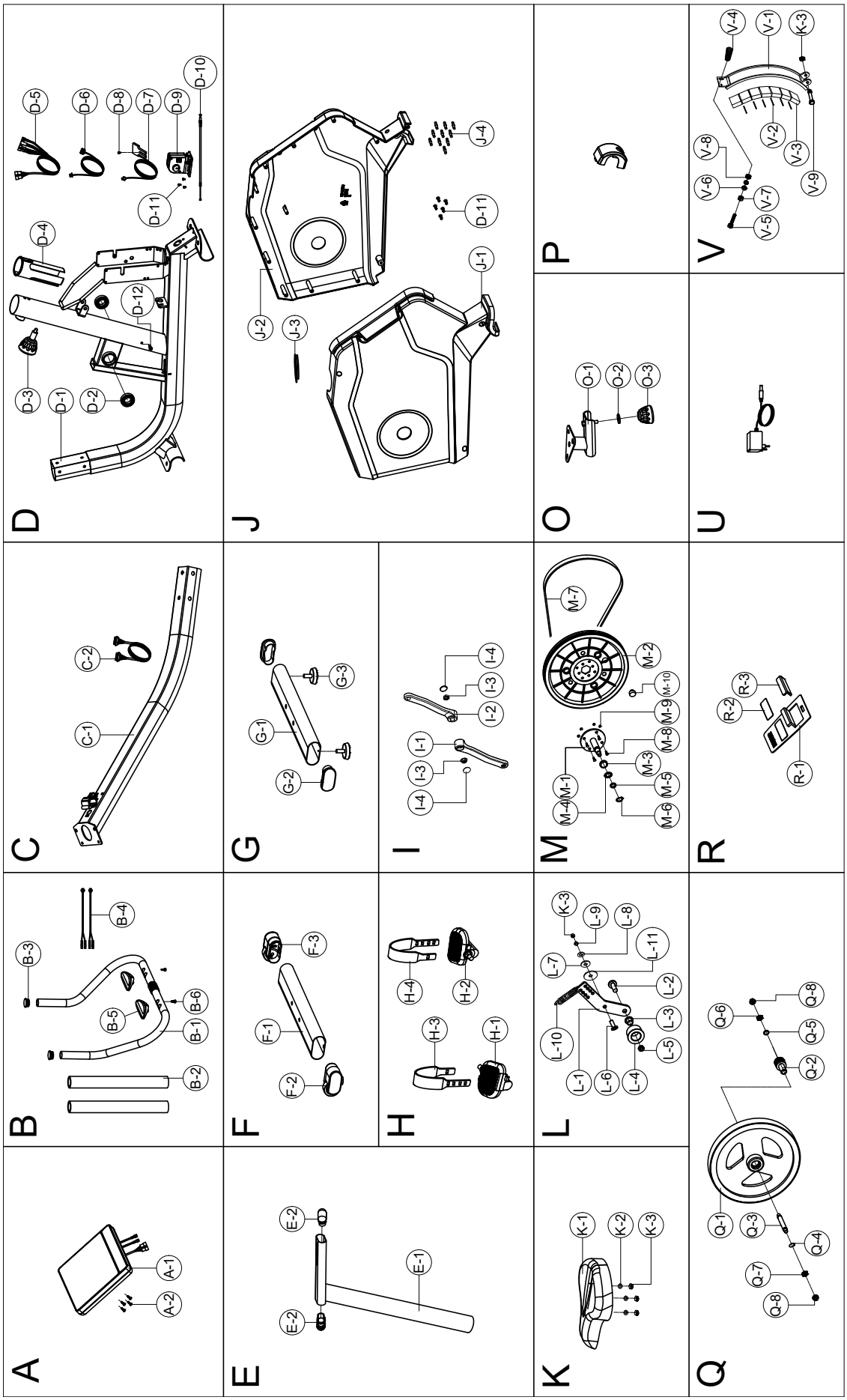
D
D-1
D-2
D-3
D-4
D-5
D-6
D-7
D-8
D-9
D-10
D-11
D-12
J
J-1
J-2
J-3
J-4
D-11
P
O
O-1
O-2
O-3
V
V-1
V-2
V-3
V-4
V-5
V-6
V-7
V-8
V-9
K-3
C
C-1
C-2
G
G-1
G-2
G-3
I
I-1
I-2
I-3
I-4
M
M-1
M-2
M-3
M-4
M-5
M-6
M-7
M-8
M-9
M-10
U
R
R-1
R-2
R-3
B
B-1
B-2
B-3
B-4
B-5
B-6
F
F-1
F-2
F-3
H
H-1
H-2
H-3
H-4
L
L-1
L-2
L-3
L-4
L-5
L-6
L-7
L-8
L-9
L-10
L-11
K-3
A
A-1
A-2
E
E-1
E-2
E-2
K
K-1
K-2
K-3
Q
Q-1
Q-2
Q-3
Q-4
Q-5
Q-6
Q-7
Q-8
Q-8

10 WARRANTY

Products from BodyMax® are subject to strict quality control. However, if a fitness equipment purchased from us does not work perfectly, we take it very seriously and ask you to contact our customer service as indicated. We are happy to help you by phone via our service hotline.

Error Descriptions
Your fitness equipment is developed for long-term, high-quality training. However, should a problem arise, please first read the operating instructions. For further assistance, please contact your contract partner or call our service hotline. To ensure your problem is solved as quickly as possible, please describe the defect as exactly as possible.

In addition to the statutory warranty, we provide a warranty for every fitness equipment purchased from us according to the following provisions.

Your statutory rights are not affected.

Warrantee
The warrantee is the first/original buyer.

Warranty periods
The following warranty periods begin on delivery of the fitness equipment.

Warranty period
The warranty periods, shown on our web shop, begin on delivery of the fitness equipment. The respective warranty periods for your equipment can be found on its product website.

Repair Costs
According to our choice, there will either be a repair, a replacement of individual damaged parts or a complete replacement. Spare parts, that have to be mounted while assembling the equipment, have to be replaced by the warrantee personally and are not a part of repair. After the expiration of the warranty period, the responsibility for parts costs, repair costs, installation costs and delivery costs lies with the warranty holder.

The terms of use are defined as follows:

- Home use: solely for private use in private households up to 3 hours per day
- Semi-professional use: up to 6 hours per day (e. g. rehabilitation centres, hotels, clubs, company gyms)
- Professional use: more than 6 hours per day (e. g. commercial gyms)

Warranty Service
Within the warranty period, equipment which develops faults as a result of material or manufacturing defects, will be repaired or replaced at our discretion. Ownership of equipment or parts of equipment which have been replaced is transferred to us. The warranty period is not extended nor does a new warranty period begin following repair or replacement under the warranty.

Warranty Conditions
For the warranty to be valid, the following steps must be taken:

Please contact our customer service by email or phone. If the product under warranty has to be sent in for repair, the seller bears costs. After expiry of the warranty, the buyer bears the costs of transport and insurance. If the fault is covered by our warranty, you will receive a new or repaired equipment in return.

Warranty claims are invalid in case of damage resulting from:

+ misuse or improper handling
+ environmental influences (moisture, heat, electrical surge, dust, etc.)
+ failure to follow the current safety measures for the equipment
+ failure to follow the operating instructions
+ use of force (e. g. hitting, kicking, falling)
+ interventions which were not carried out by one of our authorized service centres
+ unauthorised repair attempts

Proof of Purchase and Serial Number
Please make sure that you are able to provide the appropriate receipt when claiming on your warranty. So that we can clearly identify the model of your equipment, and for the purposes of our quality control, you will need to give the serial number of your equipment, when contacting the service team. Where possible please have your serial number and your customer number ready when you call our service hotline. It will help us to deal with your request swiftly.

If you cannot find the serial number on your fitness equipment, our service team is at your disposal to offer further information.

Service outside of the Warranty Period
We are also happy to issue an individual cost estimate if there is a problem with your fitness equipment after the warranty has expired, or in cases which do not fall under the terms of the warranty, e. g. normal wear and tear. Please contact our customer service team to find a quick and cost-effective solution to your problem. In such a case you will be responsible for the delivery costs.

Communication
Many problems can be solved just by speaking to us as your specialist supplier. We know how important it is to you as a user of the fitness equipment to have problems solved quickly and simply, so you can enjoy working out with minimal interruption. For that reason, we also want to resolve your queries quickly and in a straightforward manner. Thus, please always keep your customer number and the serial number of the faulty equipment handy.

11 CONTACT

DE

TECHNIK

+49 4621 4210-900
+49 4621 4210-698
technik@fitshop.de
Öffnungszeiten entnehmen Sie unserer Homepage.

SERVICE

0800 20 20277 (kostenlos)
04621 4210 - 0
info@fitshop.de
Öffnungszeiten entnehmen Sie unserer Homepage: https://stg.fit/statita

DK

TEKNIK OG SERVICE

80 90 16 50
+49 4621 4210-945
info@fitshop.dk
Åbningstider kan findes på hjemmesiden: https://stg.fit/statit7

UK

CUSTOMER CARE

+44 141 737 2249 or +44 141 876 3972
customercare@fitshop.co.uk
You can find the opening hours on our homepage: https://stg.fit/statitd

FR

TECHNIQUE & SERVICE

+33 (0) 189 530984
+49 4621 42 10 933
info@fitshop.fr
Vous trouverez les heures d'ouverture sur notre site Internet: https://stg.fit/statit4

BE

TECHNIQUE & SERVICE

02 732 46 77
+49 4621 4210 933
info@fitshop.be
Vous trouverez les heures d'ouverture sur notre site Internet: https://stg.fit/statit8

ES

TECNOLOGÍA Y SERVICIOS

938 805 790
info@fitshop.es
Consulta nuestro horario de apertura en la página web: https://stg.fit/statit5

NL

TECHNISCHE DIENST & SERVICE

+31 172 619961
service@fitshop.nl
De openingstijden vindt u op onze homepage: https://stg.fit/statit3

INT

TECHNICAL SUPPORT & SERVICE

+49 4621 4210-944
service-int@fitshop.de
You can find the opening hours on our homepage: https://stg.fit/statita

PL

DZIAŁ TECHNICZNY I SERWIS

22 307 43 21
+49 4621 42 10-948
info@fitshop.pl
Godziny otwarcia można znaleźć na stronie głównej: https://stg.fit/statit6

AT

TECHNIK & SERVICE

0800 20 20277 (Freecall)
+49 4621 42 10-0
info@fitshop.at
Öffnungszeiten entnehmen Sie unserer Homepage: https://stg.fit/statitb

CH

TECHNIK & SERVICE

0800 202 027
+49 4621 42 10-0
info@fitshop.ch
Öffnungszeiten entnehmen Sie unserer Homepage: https://stg.fit/statit9

Please find a detailed overview including address and opening hours for all stores of Fitshop UK on the following website:

www.fitshop.co.uk/storelocator

WE LIVE FITNESS

WEBSHOP AND SOCIAL MEDIA

The Fitshop Group is Europe's largest specialist for home fitness equipment with currently 65 stores and one of the world's most renowned online mail order companies for fitness equipment.

Fitshop UK is part of the Fitshop Group. Private customers order via the 25 web shops in the respective national language or have their desired equipment assembled on site. In addition, the company supplies fitness studios, hotels, sports clubs, companies and physio practices with professional equipment for endurance and strength training.

The Fitshop group offers a wide range of fitness equipment from renowned manufacturers, high-quality in-house developments and comprehensive services, such as a build-up service and sports scientific advice before and after the purchase. The company employs numerous sports scientists, fitness trainers and competitive athletes.

Visit us also on our social media platforms or our blog!

FIT SHOP
https://www.fitshop.co.uk
www.fitshop.co.uk/blog

www.facebook.com/fitshop.co.uk

www.instagram.com/fitshop_uk

www.youtube.com/@fitshop_uk

TAURUS

cardiostrong

BODYCRAFT

BodyMax

Notes

Notes

BodyMax

UC200